WANSHSIN®
萬鑫精工

致力于打造世界一流的中国传动品牌

经销商
Distributor

WANSHSIN®
萬鑫精工

Planetary Gearbox
CONTENTS
行星减速机产品目录

Committed to building a world-class transmission brand
致力于打造世界一流的中国传动品牌

COMPANY PROFILE

万鑫精工(湖南)有限公司（简称万鑫精工）是集研发、生产、销售、服务于一体的专业化减速电机企业，主要生产高精密减速电机，产品广泛应用于机器人、机床、立体停车库等轻工自动化设备。作为一家专注于减速电机的制造商及智能自动化全套方案提供商，万鑫精工引入国外先进加工设备，致力于为全球客户提供技术前沿、品质卓越的各类减速电机产品，是国内减速电机行业的优质品牌。

为满足国内外客户的需求，全面开启国际化战略布局，万鑫精工立志走“精鑫”强企强国之路，先后引入国内外多名高新技术人才加盟，更加重视现有产品的质量提升以及新产品的研发。在未来的发展中，万鑫精工将继续秉持着“致力于铸就世界一流的中国传动品牌”的信念与愿景，为助推世界工业智能化发展而奋斗!

WANSHSIN SEIKOU (HUNAN) CO., LTD. (hereafter referred to as “WANSHSIN”) is professional gear motor manufacturer integrates R&D, production ,sales and service. WANSHSIN mainly manufactures high–precision gear motors which are widely used in robots, machine tools, solid garages and other industrial automation. As a gear motor manufacturer and complete intelligent automation solutions provider, WANSHSIN introduced advanced import processing equipment, adopted advanced technology, to meet the strict high quality requirement for worldwide customers. All efforts made WANSHSIN a reputable and high quality brand in domestic gear motor industry.

To satisfy domestic and foreign customers' requirements, WANSHSIN fully opened the international strategic layout, determined to follow the path of building a strong enterprise for a stronger country, WANSHSIN pays more attention to the quality improvement of current products and development of new products, and successively introduced high–tech talents, both domestic and international. In the future, WANSHSIN will continuously keep the faith that “Committed to building a world–class transmission brand” and strive to the development of the industrial intelligent system of the world.

INTERNAL STRUCTURE

INTERNAL
STRUCTURE

● 如何选用减速机
Installation and usage

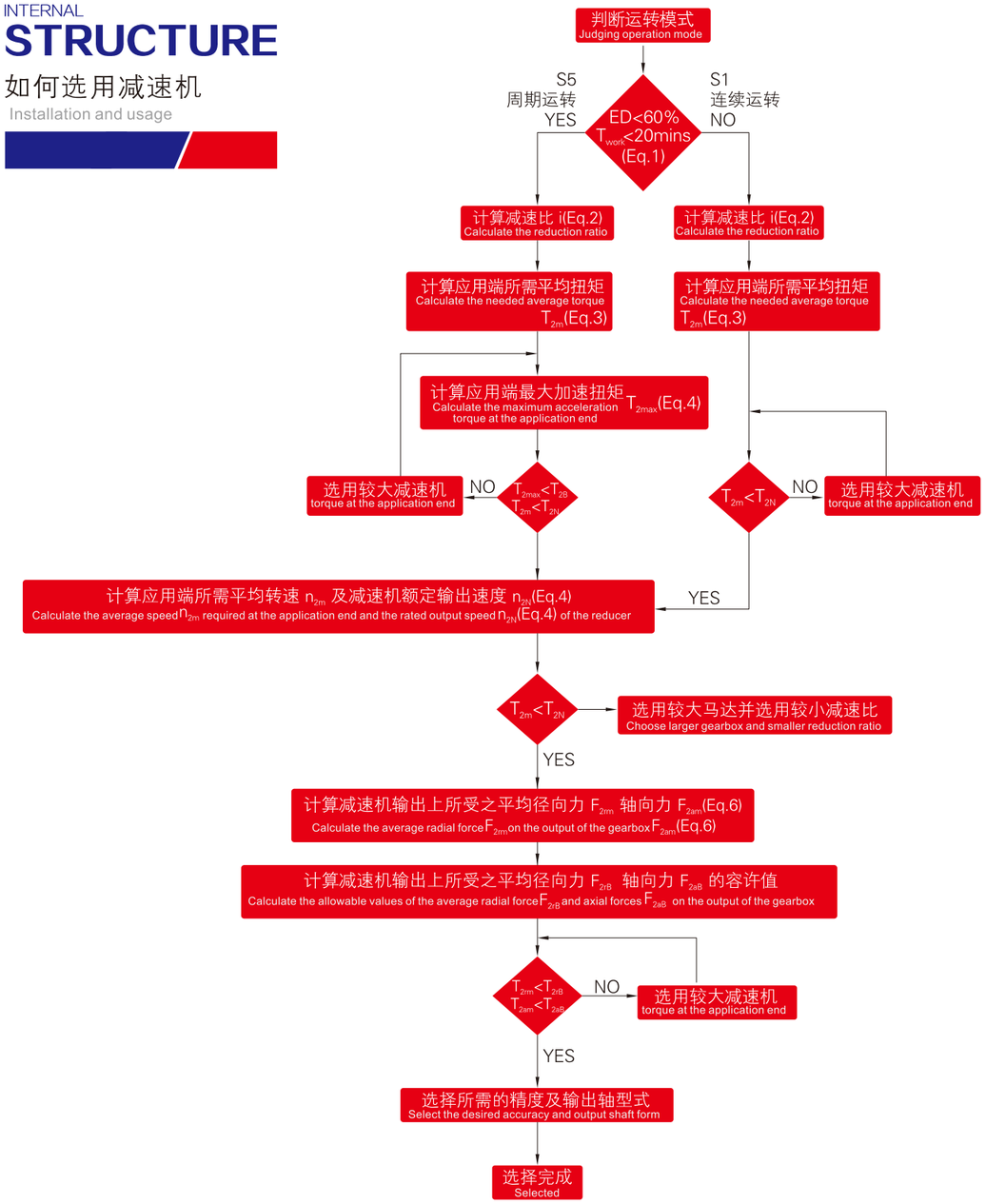

S5 周期运转之建议事项 一般的应用惯量须符合以下公式： $\frac{J_L}{i^2} \leqslant 4xJ_m$	最适当的应用惯量须符合以下公式： $\frac{J_L}{i^2} \cong J_m$

J_L: 负载惯量　J_m: 马达惯量

S5 suggestions for cycle operation General application inertia must conform to the following formula $\frac{J_L}{i^2} \leqslant 4xJ_m$	The most appropriate application inertia must conform to the following formula $\frac{J_L}{i^2} \cong J_m$

J_L: Load inertia　J_m: Motor inertia

● 输出轴扭矩
Output shaft torque

● 输出轴承受作用力
Output shaft load

● 输出转速
output speed

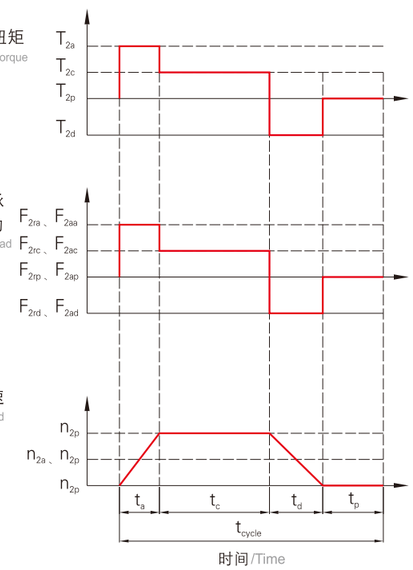

1

$$ED=\frac{t_a+t_c+t_d}{t_{cycle}} x100\% \text{ ，} t_{work}=t_a+t_c+t_d$$

下标说明 Subscript description:
a. 加速， a.accelerate, c. 等速， c.constant, d. 减速， d.decelerate, p. 停止 p.stop　(Eq.1)

2

$$i \cong \frac{n_m}{n_{work}}$$

n_m：马达输出速度 n_m : Motor output speed　n_{work}：实际应用速度 n_{work} : Actual application speed　(Eq.2)

3

$$T_{2m}=\sqrt[3]{\frac{n_{2a}xt_axT_{2a}^3+n_{2c}xt_cxT_{2c}^3+n_{2d}xt_dxT_{2d}^3}{n_{2a}xt_a+n_{2c}xt_c+n_{2d}xt_d}} \quad (Eq.3)$$

4

$$T_{2max}=T_{mB}xixk_sx\ \eta$$

	Ks	周期次数 / 小时
Ks 负载系数	1.0	0~1000
	1.1	1000~1500
	1.3	1500~2000
	1.6	2000~3000
	1.8	3000~5000

TmB 马达最大输出扭矩 Motor maxiumum output torque
η 减速机运转效率 Gearbox operating efficiency　(Eq.4)

5

$$n_{2a}=n_{2d}=\frac{1}{2}xn_{2c}$$

$$n_{2m}=\frac{n_{2a}xt_a+n_{2c}xt_c+n_{2d}xt_d}{T_a+t_c+t_d}$$

$$n_{2N}=\frac{n_{1N}}{i} \quad (Eq.5)$$

6

$$F_{2rm}=\sqrt[3]{\frac{n_{2a}xt_axF_{2ra}^3+n_{2c}xt_cxF_{2rc}^3+n_{2d}xt_dxF_{2rd}^3}{N_{2a}xt_a+n_{2c}xt_c+n_{2d}xt_d}}$$

$$F_{2am}=\sqrt[3]{\frac{n_{2a}xt_axF_{2aa}^3+n_{2c}xt_cxF_{2rc}^3+n_{2d}xt_dxT_{2ad}^3}{n_{2a}xt_a+n_{2c}xt_c+n_{2d}xt_d}} \quad (Eq.6)$$

WAB

系列行星减速机/series planetary gearbox

WABR

系列行星减速机 /series planetary gearbox

WAD

系列行星减速机/series planetary gearbox

WADR

系列行星减速机 /series planetary gearbox

WVRB

系列行星减速机/series planetary gearbox

WVRBR

系列行星减速机/series planetary gearbox

WAE

系列行星减速机 /series planetary gearbox

WAER

系列行星减速机/series planetary gearbox

WPF

系列行星减速机/series planetary gearbox

WPFR

系列行星减速机/series planetary gearbox

WPL

系列行星减速机 /series planetary gearbox

WPLR

系列行星减速机/series right-angle gearbox

WR

系列行星减速机/series planetary gearbox

WTN

系列中空旋转平台/series hollow rotating platform

WAB Series planetary gearbox 系列行星减速机

FEATURES
产品特点

- 行星臂架与输出轴采用一体式结构设计，确保最大的扭转刚性。
- 行星轮采用满滚针设计，增加接触面积以提高结构刚性与输出扭矩。
- 齿轮采用低碳钢表面渗碳淬火到HRC62，以获得最佳的耐磨及冲击韧性。
- 齿形引用国外进口软件辅助设计，以获得最佳的齿形降低噪音。
- 输入端与马达轴连接采用双边抱紧方式，以获取最大的夹紧力和零背隙的动力传递。

- Planetary boom and output shaft are intergrated structure designed to ensure maximum torsional rigidity.
- Planetary wheel with full needle design,increase the contact area to improve the rigidity and output torque.
- The gears are carburized and quenched to the HRC62 with low carbon steel surface for optimum wear and impact toughness.
- Gears refer to foreign imported software-assisted design to obtain the best tooth shape to reduce noise.
- The input terminal is connected to the motor shaft in a double-tight manner to obtain the maximum clamping force and zero backlash power transmission.

INDICATION FOR MODEL

SELECTION

● 机种型号表示

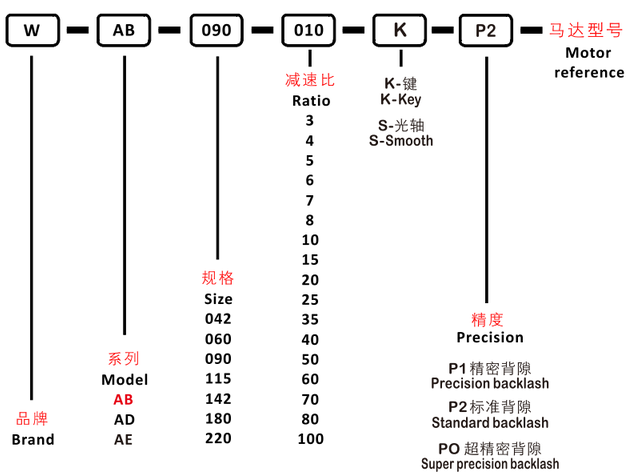

GENERAL NOTICES

● 订货须知

- 机种、型号、扭矩
- 减速比或出力轴转速
- 工况及连接方式
- 数量及安装的机械名称
- 入力方式和入力转速
- 马达厂牌型号或法兰及马达轴尺寸

- Type, model and torque
- Ratio or output speed
- Working conditions and connection methods
- Quantity and installed machine name
- Input mode and input speed
- Motor brand model or flange and motor shaft size

PLANETARY GEARBOX

● 减速机性能资料 /Performance

规格 Specification	单位 Unit	节数 Stage	减速比 Ratio	WAB042	WAB060	WAB090	WAB115	WAB142	WAB180	WAB220
额定输出力矩 Rated output torque T_{2N}	Nm	1	3	19	50	130	208	342	588	1140
			4	20	55	140	290	542	1050	1700
			5	22	60	160	330	650	1200	2000
			6	20	55	150	310	600	1100	1900
			7	19	50	140	300	550	1100	1800
			8	17	45	120	260	500	1000	1600
			10	14	40	100	230	450	900	1500
		2	15	20	55	130	208	342	588	1140
			20	19	50	140	290	542	1050	1700
			25	22	60	160	330	650	1200	2000
			30	20	55	150	310	600	1100	1900
			35	19	50	140	300	550	1100	1800
			40	17	45	120	260	500	1000	1600
			50	22	60	160	330	650	1200	2000
			60	20	55	150	310	600	1100	1900
			70	19	50	140	300	550	1100	1800
			80	17	45	120	260	500	1000	1600
			100	14	40	100	230	450	900	1500
急停扭矩 /Emergency stop torque T_{2NOT}	Nm	1,2	3～100	三倍额定输出力矩 /Triple rated output torque						
额定输入转速/Rated input speed n_{1N}	rpm	1,2	3～100	5000	5000	4000	4000	3000	3000	2000
最大输入转速/Maximum iutput speed n_{1B}		1,2	3～100	10000	10000	8000	8000	6000	6000	4000
超精密背隙 /Super precision backlash P0	arcmin	1	3～10	-	≤2	≤2	≤2	≤2	≤2	≤2
		2	15～100	-	≤3	≤3	≤3	≤3	≤3	≤3
精密背隙 /Precision backlash P1	arcmin	1	3～10	-	≤3	≤3	≤3	≤3	≤3	≤3
		2	15～100	-	≤5	≤5	≤5	≤5	≤5	≤5
标准背隙 /Standard backlash P2	arcmin	1	3～10	≤12	≤5	≤5	≤5	≤5	≤5	≤5
		2	15～100	≤16	≤8	≤8	≤8	≤8	≤8	≤8
扭转刚性 /Torsional rigidity	Nm/arcmin	1,2	3～100	3	7	14	25	50	145	225
容许径向力/Allowable radial force F_{2aB}	N	1,2	3～100	780	1530	3250	6700	9400	14500	50000
容许轴向力/Allowable axial force F_{2aB}	N	1,2	3～100	390	765	1625	3350	4700	7250	25000
使用寿命 /Lifespan	hr	1,2	3～100	20000						
效率 /Efficiency	%	1	3～10	≥97%						
		2	15～100	≥94%						
重量 /Weight	kg	1	3～10	0.6	1.2	3.7	7.8	14.5	29	48
		2	15～100	0.8	1.8	4.1	10.8	17.5	33	60
使用温度 /Working temperature	℃	1,2	3～100	-10℃～90℃						
润滑 /Lubricating		1,2		合成润滑油脂 /Synthetic lubricating grease						
防护等级 /IP Grade		1,2	3～100	IP65						
安装方向 /Installation direction		1,2	3～100	任意方向 /In any direction						
噪音值(n1=3000rpm,无负载) Noise level（n1=3000rpm,off load）	dB(A)	1,2	3～100	≤56	≤58	≤60	≤63	≤65	≤67	≤70

ROTATIONAL INERTIA OF

REDUCER

- 减速机转动惯量

规格 Specification	单位 Unit	节数 Stage	减速比 Ratio	WAB042	WAB060	WAB090	WAB115	WAB142	WAB180	WAB220
转动惯量J1 Rotational inertia J1	kg・cm²	1	3	0.03	0.16	0.61	3.25	9.21	28.98	69.61
			4	0.03	0.14	0.48	2.74	7.54	23.67	54.37
			5	0.03	0.13	0.47	2.71	7.42	23.29	53.27
			6	0.03	0.13	0.45	2.65	7.25	22.75	51.72
			7	0.03	0.13	0.45	2.62	7.14	22.48	50.97
			8	0.03	0.13	0.44	2.58	7.07	22.59	50.84
			10	0.03	0.13	0.44	2.57	7.03	22.51	50.56
		2	15	0.03	0.03	0.13	0.47	2.71	7.42	23.29
			20	0.03	0.03	0.13	0.47	2.71	7.42	23.29
			25	0.03	0.03	0.13	0.47	2.71	7.42	23.29
			30	0.03	0.03	0.13	0.47	2.71	7.42	23.29
			35	0.03	0.03	0.13	0.47	2.71	7.42	23.29
			40	0.03	0.03	0.13	0.47	2.71	7.42	23.29
			50	0.03	0.03	0.13	0.44	2.57	7.03	22.51
			60	0.03	0.03	0.13	0.44	2.57	7.03	22.51
			70	0.03	0.03	0.13	0.44	2.57	7.03	22.51
			80	0.03	0.03	0.13	0.44	2.57	7.03	22.51
			100	0.03	0.03	0.13	0.44	2.57	7.03	22.51

1.减速比（$i=N_{in}/N_{out}$）
1. Ratio（$i=N_{in}/N_{out}$）

2.最大加速力矩 T_{2B} =60% of T_{2NOT}
2. Maximum acceleration torque T_{2B} =60% of T_{2NOT}

3. 输出转数 100rpm ,作用于输出轴中心位置
3. Output speed100rpm,acting on the center of the output shaft

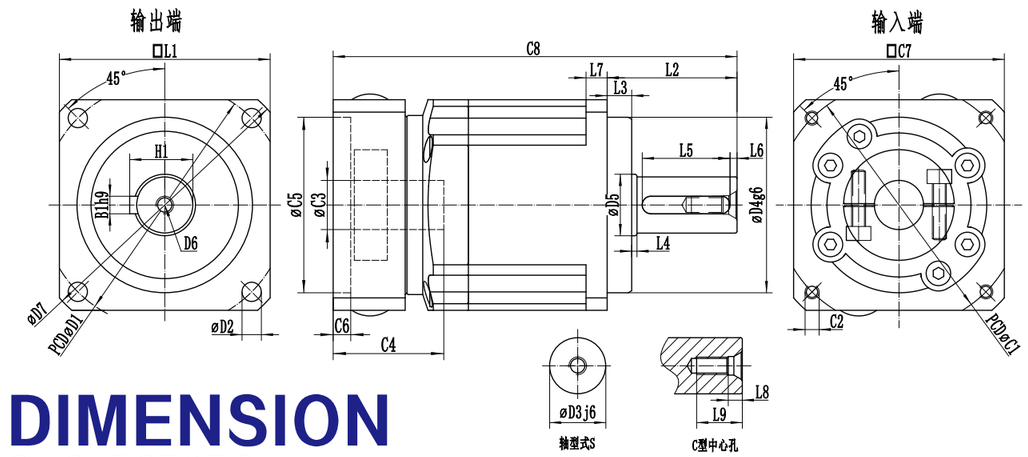

DIMENSION

SINGLE SECTION

- 尺寸（单节，减速比 i=3～10）

Dimension(single stage,Ratio i=3~10)

尺寸/Dimension	WAB042	WAB060	WAB090	WAB115	WAB142	WAB180	WAB220
D1	50	70	100	130	165	215	250
D2	3.5	5.5	6.6	9	11	13	17
D3 j6	13	16	22	32	40	55	75
D4 g6	35	50	80	110	130	160	180
D5	15	18	30	40	50	70	85
D6	M4*0.7P	M5*0.8P	M8*1.25P	M12*1.75P	M16*2.0P	M20*2.5P	M20*2.5P
D7	56	80	116	152	185	240	292
L1	42	60	90	115	142	180	220
L2	26	37	48	65	97	105	138
L3	5.5	7	10	12	15	20	30
L4	1	1.5	1.5	2	3	3	3
L5	16	25	32	40	63	70	90
L6	2	2	3	5	5	6	7
L7	4	6	8	10	12	15	20
L8	4.5	4.8	7.2	10	12	15	15
L9	10	12.5	19	28	36	42	42
C1	46	70 90	90 145	145 200	200	200	235
C2	M4*0.7P	M4 M5	M5 M8	M8 M12	M12*1.75P	M12*1.75P	M12*1.75P
C3	8	≤14 ≤19	≤19 ≤24	≤24 ≤35	≤35/≤42	≤42	≤42/≤55
C4	26	31.5 41	41 59	60 81	81	114	117
C5	30	50 70	70 110	110 114.3	114.3	114.3	200
C6	5	5 5	6 14	14 19	19	24	20
C7	42	60 80	80 130	130 180	180	180	220
C8	86	115 128	145 163	199.5 221.5	279	318	377
B1 h9	5	5	6	10	12	16	20
H1	15	18	24.5	35	43	59	79.5

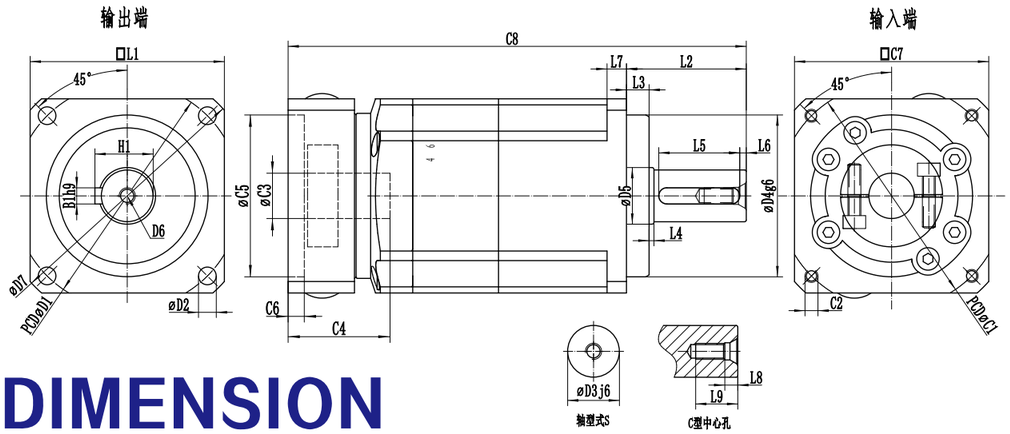

DIMENSION

DOUBLE SECTION

- 尺寸（双节，减速比 i=15～100）

Dimension(double stage,Ratio i=15~100)

尺寸/Dimension	WAB042	WAB060		WAB090			WAB115		WAB142	WAB180	WAB220
D1	50	70		100			130		165	215	250
D2	3.5	5.5		6.6			9		11	13	17
D3 j6	13	16		22			32		40	55	75
D4 g6	35	50		80			110		130	160	180
D5	15	18		30			40		50	70	85
D6	M4*0.7P	M5*0.8P		M8*1.25P			M12*1.75P		M16*2.0P	M20*2.5P	M20*2.5P
D7	56	80		116			152		185	240	292
L1	42	60		90			115		142	180	220
L2	26	37		48			65		97	105	138
L3	5.5	6		10			12		15	20	30
L4	1	1.5		1.5			2		3	3	3
L5	16	25		32			40		63	70	90
L6	2	2		3			5		5	6	7
L7	4	7		8			10		12	15	20
L8	4.5	4.8		7.2			10		12	15	15
L9	10	12.5		19			28		36	42	42
C1	46	70	90	70	90	145	90	145	145	200	200
C2	M4*0.7P	M4	M5	M4	M5	M8	M5	M8	M8*1.25P	M12*1.75P	M12*1.75P
C3	8	≤14	≤19	≤14	≤19	≤24	≤19	≤24	≤24/≤28	≤35	≤42
C4	26	31.5	41	31.5	41	59	41	60	66	80	114
C5	30	50	70	50	70	110	70	110	110	114.3	114.3
C6	5	5	5	5	6	14	6	14	10	9	24
C7	42	60	80	60	80	130	80	130	130	180	180
C8	107	141.5	154.5	162.5	179	197	214	244.5	340	352.5	441.5
B1 h9	5	5		6			10		12	16	20
H1	15	18		24.5			35		43	59	79.5

WAD

Series planetary gearbox

系列行星减速机

FEATURES

产品特点

- 行星臂架与输出轴采用一体式结构设计，确保最大的扭转刚性。
- 行星轮采用满滚针设计，增加接触面积以提高结构刚性与输出扭矩。
- 齿轮采用低碳钢表面渗碳淬火到HRC62，以获得最佳的耐磨及冲击韧性。
- 齿形引用国外进口软件辅助设计，以获得最佳的齿形降低噪音。
- 输入端与马达轴连接采用双边抱紧方式，以获取最大的夹紧力和零背隙的动力传递。

- Planetary boom and output shaft are intergrated structure designed to ensure maximum torsional rigidity.
- Planetary wheel with full needle design,increase the contact area to improve the rigidity and output torque.
- The gears are carburized and quenched to the HRC62 with low carbon steel surface for optimum wear and impact toughness.
- Gears refer to foreign imported software-assisted design to obtain the best tooth shape to reduce noise.
- The input terminal is connected to the motor shaft in a double-tight manner to obtain the maximum clamping force and zero backlash power transmission.

INDICATION FOR MODEL

SELECTION

- 机种型号表示

W – AD – 010 – 010 – P1 – 马达型号 Motor reference

W — 品牌 Brand

AD — 系列 Model
- AB
- AD
- AE

010 — 规格 Size
- 047
- 064
- 090
- 110
- 140
- 200
- 255

010 — 减速比 Ratio
- 4
- 5
- 6
- 7
- 8
- 10
- 15
- 20
- 25
- 35
- 40
- 50
- 60
- 70
- 80
- 100

P1 — 精度 Precision
- PO 超精密背隙 Super precision backlash
- P1 精密背隙 Precision backlash
- P2 标准背隙 Standard backlash

GENERAL NOTICES

- 订货须知

– 机种、型号、扭矩
– 减速比或出力轴转速
– 工况及连接方式
– 数量及安装的机械名称
– 入力方式和入力转速
– 马达厂牌型号或法兰及马达轴尺寸

– Type, model and torque
– Ratio or output speed
– Working conditions and connection methods
– Quantity and installed machine name
– Input mode and input speed
– Motor brand model or flange and motor shaft size

PLANETARY GEARBOX

- 减速机性能资料 /Performance

规格 Specification	单位 Unit	节数 Stage	减速比 Ratio	WAD047	WAD064	WAD090	WAD110	WAD140	WAD200	WAD255
额定输出力矩 Rated output torque T_{2N}	Nm	1	4	19	48	130	270	560	1100	1700
			5	22	60	160	330	650	1200	2000
			6	19	50	140	300	550	1100	1800
			7	19	50	140	300	550	1100	1800
			8	14	40	100	230	450	900	1500
			10	14	40	100	230	450	900	1500
		2	20	19	48	130	270	560	1100	1700
			25	22	60	160	330	650	1200	2000
			35	19	50	140	300	550	1100	1800
			40	19	48	130	270	560	1000	1700
			50	22	60	160	330	650	1200	2000
			60	19	50	140	300	550	1100	1800
			70	19	50	140	300	550	1100	1800
			80	14	40	100	230	450	900	1500
			100	14	40	100	230	450	900	1500
急停扭矩 /Emergency stop torque T_{2NOT}	Nm	1,2	4～100	三倍额定输出力矩 /Triple rated output torque						
额定输入转速/Rated input speed n_{1N}	rpm	1,2	4～100	5000	5000	4000	4000	3000	3000	2000
最大输入转速/Maximum iutput speed n_{1B}		1,2	4～100	10000	10000	8000	8000	6000	6000	4000
超精密背隙/Super precision backlash P0	arcmin	1	4～10	–	≤2	≤2	≤2	≤2	≤2	≤2
		2	20～100	–	≤3	≤3	≤3	≤3	≤3	≤3
精密背隙 /Precision backlash P1	arcmin	1	4～10	–	≤3	≤3	≤3	≤3	≤3	≤3
		2	20～100	–	≤5	≤5	≤5	≤5	≤5	≤5
标准背隙 /Standard backlash P2	arcmin	1	4～10	–	≤5	≤5	≤5	≤5	≤5	≤5
		2	20～100	–	≤8	≤8	≤8	≤8	≤8	≤8
扭转刚性 /Torsional rigidity	Nm/arcmin	1,2	4～100	7	13	31	82	151	440	1006
最大弯曲力矩 Maximum bending torque M2KB	Nm	1,2	4～100	42.5	125	235	430	1300	3064	5900
容许轴向力/Allowable axial force F_{2aB}	N	1,2	4～100	990	1050	2850	2990	10590	16660	29430
使用寿命 /Lifespan	hr	1,2	4～100	20000						
效率 /Efficiency	%	1	4～10	≥97%						
		2	20～100	≥94%						
重量 /Weight	kg	1	4～10	0.7	1.1	2.9	5.4	11.9	31.6	56.1
		2	20～100	1	1.7	4.2	8	15.9	36.9	70.4
使用温度 /Working temperature	℃	1,2	4～100	–10℃～90℃						
润滑 /Lubricating		1,2		合成润滑油脂 /Synthetic lubricating grease						
防护等级 /IP Grade		1,2	4～100	IP65						
安装方向 /Installation direction		1,2	4～100	任意方向 /In any direction						
噪音值(n1=3000rpm,无负载) Noise level (n1=3000rpm,off load)	dB(A)	1,2	4～100	≤56	≤58	≤60	≤63	≤65	≤67	≤70

ROTATIONAL INERTIA OF

REDUCER

- 减速机转动惯量

规格 Specification	单位 Unit	节数 Stage	减速比 Ratio	WAD047	WAD064	WAD090	WAD110	WAD140	WAD200	WAD255
转动惯量J1 Rotational inertia J1	kg・cm²	1	4	0.03	0.14	0.51	2.87	7.54	25.03	58.31
			5	0.03	0.13	0.47	2.71	7.42	23.29	53.27
			6	0.03	0.13	0.45	2.61	7.14	22.48	50.97
			7	0.03	0.13	0.45	2.67	7.14	22.48	50.97
			8	0.03	0.13	0.44	2.57	7.03	22.51	50.56
			10	0.03	0.13	0.44	2.57	7.03	22.51	50.56
		2	20	0.03	0.03	0.13	0.47	2.71	7.42	23.29
			25	0.03	0.03	0.13	0.47	2.71	7.42	23.29
			35	0.03	0.03	0.13	0.47	2.71	7.42	23.29
			40	0.03	0.03	0.13	0.44	2.57	7.03	22.51
			50	0.03	0.03	0.13	0.44	2.57	7.03	22.51
			60	0.03	0.03	0.13	0.44	2.57	7.03	22.51
			70	0.03	0.03	0.13	0.44	2.57	7.03	22.51
			80	0.03	0.03	0.13	0.44	2.57	7.03	22.51
			100	0.03	0.03	0.13	0.44	2.57	7.03	22.51

1.减速比（$i=N_{in}/N_{out}$）
1. Ratio（$i=N_{in}/N_{out}$）

2.最大加速力矩 T_{2B} =60% of T_{2NOT}
2. Maximum acceleration torque T_{2B} =60% of T_{2NOT}

3. 输出转数 100rpm ,作用于输出轴中心位置
3. Output speed100rpm,acting on the center of the output shaft

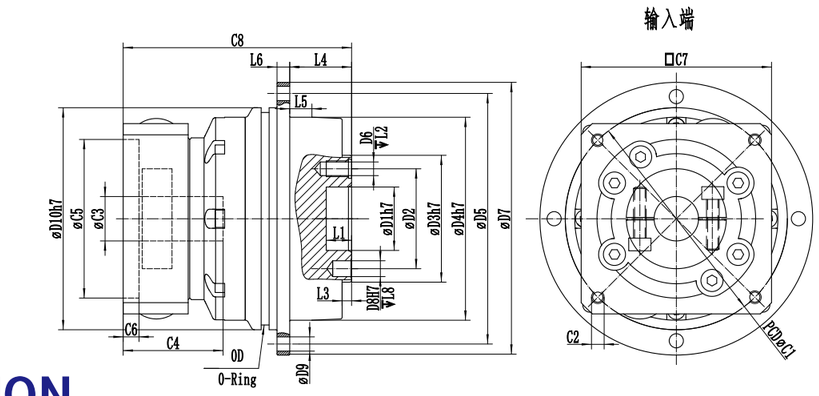

DIMENSION

SINGLE SECTION

- 尺寸（单节，减速比 i=4～10）
  Dimension(single stage,Ratio i=4~10)

尺寸/Dimension	WAD047	WAD064	WAD090	WAD110	WAD140	WAD200	WAD255
D1 H7	-	20	31.5	40	50	80	100
D2	-	31.5	50	63	80	125	140
D3 h7	-	40	63	80	100	160	180
D4 h7	-	64	90	110	140	200	255
D5	-	79	109	135	168	233	280
D6	-	7×M5×0.8P	7×M6×1P	11×M6×1P	11×M8×1.25P	11×M10×1.5P	12×M16×2.0P
D7	-	86	118	145	179	247	300
D8 H7	-	5	6	6	8	10	12
D9	-	8×4.5	8×5.5	8×5.5	12×6.6	12×9	16×13.5
D10h7	-	70	95	120	152	212	255
L1	-	8	12	12	12	16	20
L2	-	8	13.5	13.5	17	22.5	30.5
L3	-	3	6	6	6	8	12
L4	-	19.5	30	29	38	50	66
L5	-	7	10	10	14.6	15	20
L6	-	4	7	8	10	12	18
L7	-	7.7	7.5	10	12	15	20
L8	-	6	7	7	7	10	10
C1	-	70 90	90 145	145 200	200	200	235
C2	-	M4 M5	M5 M8	M8 M12	M12*1.75P	M12*1.75P	M12*1.75P
C3	-	≤14 ≤19	≤19 ≤24	≤24 ≤35	≤35/≤42	≤42	≤42/≤55
C4	-	31.5 41	41 59	60 81	81	114	117
C5	-	50 70	70 110	110 114.3	114.3	114.3	200
C6	-	5 5	6 14	14 19	19	24	20
C7	-	60 80	80 130	130 180	180	180	220
C8	-	76 89	98 116	128.5 150.5	173.5	225.5	268.5
OD	-	67×2.0	90×2.5	115×2.5	146×3	204×4	245×5

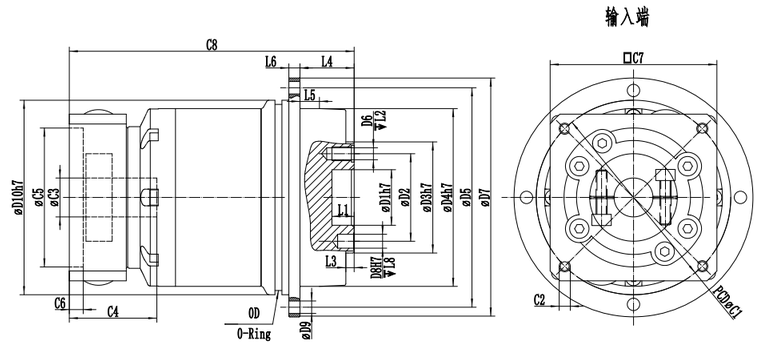

DIMENSION

DOUBLE SECTION

- 尺寸（双节，减速比 i=20～100））

Dimension(double stage,Ratio i=20~100)

尺寸/Dimension	WAD047	WAD064	WAD090	WAD110	WAD140	WAD200	WAD255
D1 H7	-	20	31.5	40	50	80	100
D2	-	31.5	50	63	80	125	140
D3 h7	-	40	63	80	100	160	180
D4 h7	-	64	90	110	140	200	255
D5	-	79	109	135	168	233	280
D6	-	7×M5×0.8P	7×M6×1P	11×M6×1P	11×M8×1.25P	11×M10×1.5P	12×M16×2.0P
D7	-	86	118	145	179	247	300
D8 H7	-	5	6	6	8	10	12
D9	-	51	77	98	125	160	190
D10	-	8×4.5	8×5.5	8×5.5	12×6.6	12×9	16×13.5
D11 h7	-	70	95	120	152	212	255
D12	-	63.2	89.2	109.2	139.2	199.2	254.5
L1	-	8	12	12	12	16	20
L2	-	8	13.5	13.5	17	22.5	20
L3	-	3	6	6	6	8	12
L4	-	19.5	30	29	38	50	66
L5	-	7	10	10	14.6	15	20
L6	-	4	7	8	10	12	18
L7	-	7.7	7.5	10	12	15	20
L8	-	6	7	7	7	10	10
C1	-	70 90	70 90 145	90 145	145	200	200
C2	-	M4 M5	M4 M5 M8	M5 M8	M8*1.25P	M12*1.75P	M12*1.75P
C3	-	≤14 ≤19	≤14 ≤19 ≤24	≤19 ≤24	≤24/≤28	≤35	≤42
C4	-	31.5 41	31.5 41 59	41 60	66	80	114
C5	-	50 70	50 70 110	70 110	110	114.3	114.3
C6	-	5 5	5 6 14	6 14	19	9	30
C7	-	60 80	60 80 130	80 130	180	180	180
C8	-	102.5 115.5	115.5 132 150	143.5 173.5	234.5	260	332.5
OD	-	67×2.0	90×2.5	115×2.5	146×3	204×4	245×5

DIMENSION

OUTPUT SHAFT DISK SURFACE

- 出力轴盘面尺寸 /Output Shaft Disk Dimension

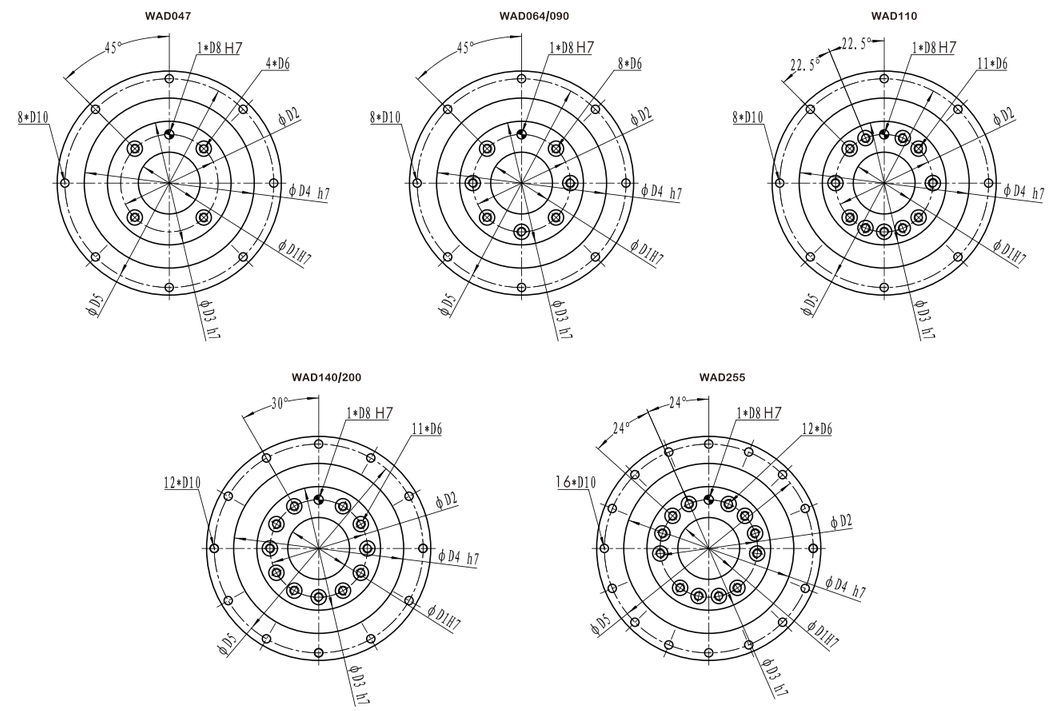

尺寸/Dimension	WAD047	WAD064	WAD090	WAD110	WAD140	WAD200	WAD255
D1 H7	12	20	31.5	40	50	80	100
D2	20	31.5	50	63	80	125	140
D3 h7	28	40	63	80	100	160	180
D4 h7	47	64	90	110	140	200	255
D5	67	79	109	135	168	233	280
D6	M3*0.5P	M5*0.8P	M6*1.0P	M6*1.0P	M8*1.25P	M10*1.5P	M16*2.0P
D8 H7	3	5	6	6	8	10	12
D10	3.4	4.5	5.5	5.5	6.8	9	13.5

WVRB Series planetary gearbox
系列行星减速机

FEATURES
产品特点

- 行星臂架与输出轴采用一体式结构设计，确保最大的扭转刚性。
- 行星轮采用满滚针设计，增加接触面积以提高结构刚性与输出扭矩。
- 齿轮采用低碳钢表面渗碳淬火到HRC62，以获得最佳的耐磨及冲击韧性。
- 齿形引用国外进口软件辅助设计，以获得最佳的齿形降低噪音。
- 输入端与马达轴连接采用双边抱紧方式，以获取最大的夹紧力和零背隙的动力传递。

- Planetary boom and output shaft are intergrated structure designed to ensure maximum torsional rigidity.
- Planetary wheel with full needle design,increase the contact area to improve the rigidity and output torque.
- The gears are carburized and quenched to the HRC62 with low carbon steel surface for optimum wear and impact toughness.
- Gears refer to foreign imported software-assisted design to obtain the best tooth shape to reduce noise.
- The input terminal is connected to the motor shaft in a double-tight manner to obtain the maximum clamping force and zero backlash power transmission.

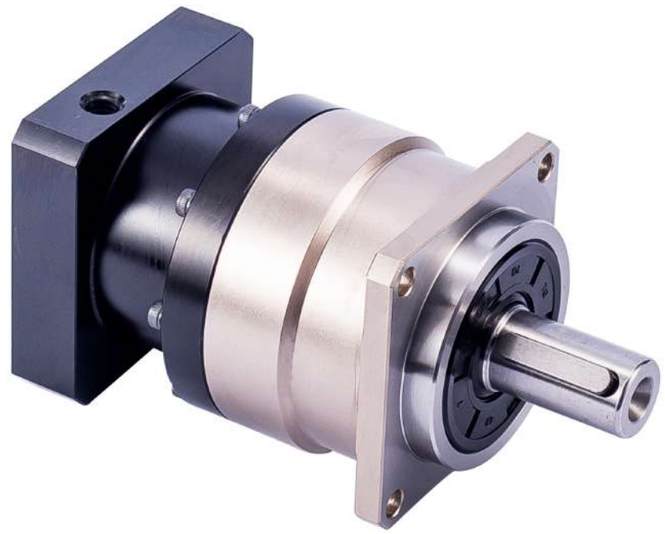

INDICATION FOR MODEL
SELECTION
机种型号表示

W – VRB – 010 – 010 – K – P2 – 马达型号 Motor reference

- W: 品牌 Brand
- VRB: 系列 Model VRB
- 010: 规格 Size 042, 060, 090, 115, 140, 180, 220
- 010: 减速比 Ratio 3, 4, 5, 6, 7, 8, 10, 15, 20, 25, 35, 40, 50, 60, 70, 80, 100
- K: K-键 S-光轴
- P2: 精度 Precision — P2标准背隙 Standard backlash
- 马达型号 Motor reference

GENERAL NOTICES
订货须知

- 机种、型号、扭矩
- 减速比或出力轴转速
- 工况及连接方式
- 数量及安装的机械名称
- 入力方式和入力转速
- 马达厂牌型号或法兰及马达轴尺寸

- Type, model and torque
- Ratio or output speed
- Working conditions and connection methods
- Quantity and installed machine name
- Input mode and input speed
- Motor brand model or flange and motor shaft size

PLANETARY GEARBOX

● 减速机性能资料 /Performance

规格 Specification	单位 Unit	节数 Stage	减速比 Ratio	WVRB042	WVRB060	WVRB090	WVRB115	WVRB140	WVRB180	WVRB220
额定输出力矩 Rated output torque T_{2N}	Nm	1	3	19	50	130	208	342	588	1140
			4	20	55	140	290	542	1050	1700
			5	22	60	160	330	650	1200	2000
			6	20	55	150	310	600	1100	1900
			7	19	50	140	300	550	1100	1800
			8	17	45	120	260	500	1000	1600
			10	14	40	100	230	450	900	1500
		2	15	20	55	130	208	342	588	1140
			20	19	50	140	290	542	1050	1700
			25	22	60	160	330	650	1200	2000
			30	20	55	150	310	600	1100	1900
			35	19	50	140	300	550	1100	1800
			40	17	45	120	260	500	1000	1600
			50	22	60	160	330	650	1200	2000
			60	20	55	150	310	600	1100	1900
			70	19	50	140	300	550	1100	1800
			80	17	45	120	260	500	1000	1600
			100	14	40	100	230	450	900	1500
急停扭矩 /Emergency stop torque T_{2NOT}	Nm	1,2	3～100	三倍额定输出力矩 /Triple rated output torque						
额定输入转速/Rated input speed n_{1N}	rpm	1,2	3～100	5000	5000	4000	4000	3000	3000	2000
最大输入转速/Maximum iutput speed n_{1B}		1,2	3～100	10000	10000	8000	8000	6000	6000	4000
标准背隙 /Standard backlash P2	arcmin	1	3～10	□12	≤5	≤5	≤5	≤5	≤5	≤5
		2	15～100	□16	≤8	≤8	≤8	≤8	≤8	≤8
扭转刚性 /Torsional rigidity	Nm/arcmin	1,2	3～100	3	7	14	25	50	145	225
容许径向力/Allowable radial force F_{2aB}	N	1,2	3～100	780	1530	3250	6700	9400	14500	50000
容许轴向力/Allowable axial force F_{2aB}	N	1,2	3～100	390	765	1625	3350	4700	7250	25000
使用寿命 /Lifespan	hr	1,2	3～100	20000						
效率 /Efficiency	%	1	3～10	≥97%						
		2	15～100	≥94%						
重量 /Weight	kg	1	3～10	0.6	1.5	3.7	7.8	16	36	53
		2	15～100	0.7	1.6	4.2	11	17	37	54
使用温度 /Working temperature	℃	1,2	3～100	-10℃～90℃						
润滑 /Lubricating		1,2	合成润滑油脂 /Synthetic lubricating grease							
防护等级 /IP Grade		1,2	3～100	IP65						
安装方向 /Installation direction		1,2	3～100	任意方向 /In any direction						
噪音值(n1=3000rpm,无负载) Noise level（n1=3000rpm,off load）	dB(A)	1,2	3～100	≤56	≤58	≤60	≤63	≤65	≤67	≤70

ROTATIONAL INERTIA OF REDUCER

● 减速机转动惯量

规格 Specification	单位 Unit	节数 Stage	减速比 Ratio	WVRB042	WVRB060	WVRB090	WVRB115	WVRB140	WVRB180	WVRB220
转动惯量J1 Rotational inertia J1	kg・cm²	1	3	0.053	0.22	1.2	5.3	20	44	90
			4	0.041	0.17	0.95	4.1	15	28	62
			5	0.036	0.16	0.86	3.6	14	22	52
			6	0.034	0.15	0.82	3.3	13	18	47
			7	0.032	0.14	0.79	3.2	12	16	42
			8	0.031	0.14	0.77	3.1	12	15	40
			10	0.03	0.14	0.75	3	11	14	38
		2	15	0.035	0.14	0.72	2.8	11	12	36
			20	0.034	0.13	0.72	2.8	11	12	35
			25	0.034	0.13	0.71	2.8	11	12	35
			30	0.03	0.13	0.7	2.7	10	11	34
			35	0.034	0.13	0.71	2.7	11	12	35
			40	0.03	0.13	0.7	2.7	10	11	33
			50	0.03	0.13	0.69	2.7	10	11	33
			60	0.03	0.13	0.69	2.7	10	11	33
			70	0.03	0.13	0.69	2.7	10	11	33
			80	0.03	0.13	0.69	2.7	10	11	33
			100	0.03	0.13	0.69	2.7	10	11	33

1.减速比（$i=N_{in}/N_{out}$）
1. Ratio（$i=N_{in}/N_{out}$）

2.最大加速力矩 T_{2B} =60% of T_{2NOT}
2. Maximum acceleration torque T_{2B} =60% of T_{2NOT}

3. 输出转数 100rpm ,作用于输出轴中心位置
3. Output speed100rpm,acting on the center of the output shaft

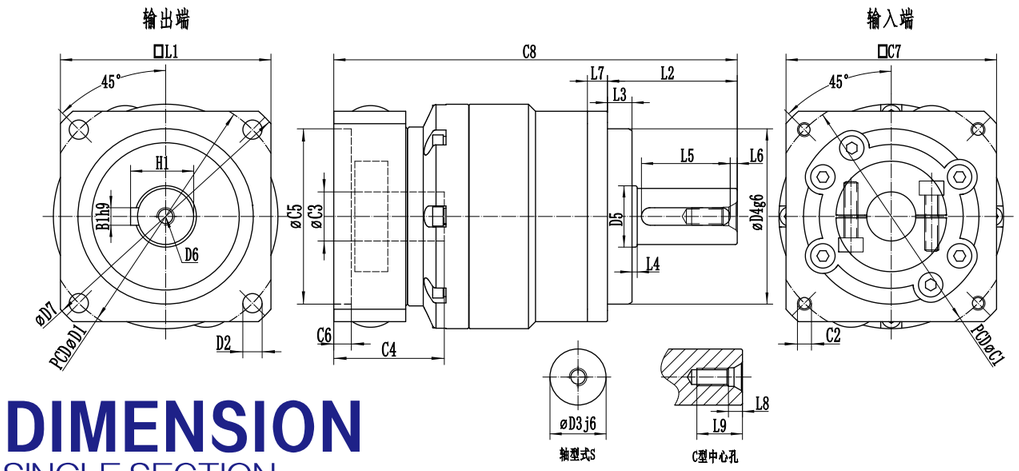

DIMENSION
SINGLE SECTION

- 尺寸（单节，减速比 i=3～10）

Dimension(single stage,Ratio i=3~10)

尺寸/Dimension	WVRB060		WVRB090		WVRB115		WVRB140	WVRB180	WVRB220
D1	70		100		130		165	215	250
D2	5.5		6.6		9		11	13.5	17
D3 j6	16		22		32		40	55	75
D4 g6	50		80		110		130	160	180
D5	18		30		40		50	70	85
D6	M5*0.8P		M8*1.25P		M12*1.75P		M16*2.0P	M20*2.5P	M20*2.5P
D7	80		116		152		185	240	290
L1	60		90		115		140	180	220
L2	37		48		60		95	105	138
L3	7		10		7		13	20	30
L4	1.5		1.5		2		3	3	3
L5	25		32		40		63	70	90
L6	2		3		5		5	6	7
L7	6		8		10		12	15	20
L8	4.8		7.2		10		12	15	15
L9	12.5		19		28		36	42	42
C1	70	90	90	145	145	200	200	200	235
C2	M4	M5	M5	M8	M8	M12	M12*1.75P	M12*1.75P	M12*1.75P
C3	≤14	≤19	≤19	≤24	≤24	≤35	≤35/≤42	≤42	≤42/≤55
C4	31.5	41	41	59	60	81	81	114	117
C5	50	70	70	110	110	114.3	114.3	114.3	200
C6	5	5	6	14	14	19	19	24	20
C7	60	80	80	130	130	180	180	180	220
C8	115	128	145	163	199.5	221.5	279	318	377
B1 h9	5		6		10		12	16	20
H1	18		24.5		35		43	59	79.5

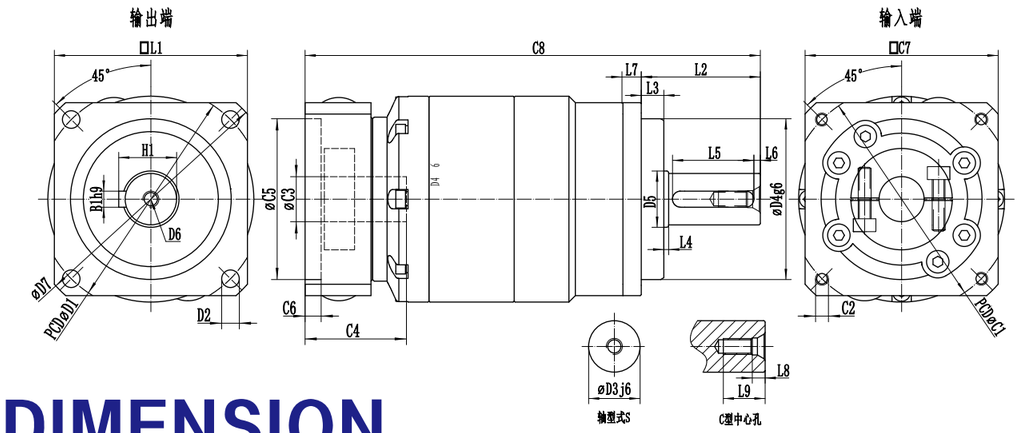

DIMENSION
DOUBLE SECTION

- 尺寸（双节，减速比 i=15～100）

Dimension(double stage,Ratio i=15~100)

尺寸/Dimension	WVRB042	WVRB060		WVRB090		WVRB115		WVRB140	WVRB180	WVRB220
D1	-	70		100		130		165	215	250
D2	-	5.5		6.6		9		11	13.5	17
D3 j6	-	16		22		32		40	55	75
D4 g6	-	50		80		110		130	160	180
D5	-	18		30		40		50	70	85
D6	-	M5*0.8P		M8*1.25P		M12*1.75P		M16*2.0P	M20*2.5P	M20*2.5P
D7	-	80		116		152		185	240	290
L1	-	60		90		115		140	180	220
L2	-	37		48		60		95	105	138
L3	-	7		10		7		13	20	30
L4	-	1.5		1.5		2		3	3	3
L5	-	25		32		40		63	70	90
L6	-	2		3		5		5	6	7
L7	-	7		8		10		12	15	20
L8	-	4.8		7.2		10		12	15	15
L9	-	12.5		19		28		36	42	42
C1	-	70	90	70	90	145	90	145	145	200	200
C2	-	M4	M5	M4	M5	M8	M5	M8	M8*1.25P	M12*1.75P	M12*1.75P
C3	-	≤14	≤19	≤14	≤19	≤24	≤19	≤24	≤24/≤28	≤35	≤42
C4	-	31.5	41	31.5	41	59	41	60	66	80	114
C5	-	50	70	50	70	110	70	110	110	114.3	114.3
C6	-	5	5	5	6	14	6	14	10	9	24
C7	-	60	80	60	80	130	80	130	130	180	180
C8	-	141.5	154.5	162.5	179	197	214	244.5	340	352.5	441.5
B1 h9	-	5		6		10		12	16	20
H1	-	18		24.5		35		43	59	79.5

WAE Series planetary gearbox
系列行星减速机

FEATURES
产品特点

- 行星臂架与输出轴采用一体式结构设计，确保最大的扭转刚性。
- 行星轮采用满滚针设计，增加接触面积以提高结构刚性与输出扭矩。
- 齿轮采用低碳钢表面渗碳淬火到HRC62，以获得最佳的耐磨及冲击韧性。
- 齿形引用国外进口软件辅助设计，以获得最佳的齿形降低噪音。
- 输入端与马达轴连接采用双边抱紧方式，以获取最大的夹紧力和零背隙的动力传递。

- Planetary boom and output shaft are intergrated structure designed to ensure maximum torsional rigidity.
- Planetary wheel with full needle design,increase the contact area to improve the rigidity and output torque.
- The gears are carburized and quenched to the HRC62 with low carbon steel surface for optimum wear and impact toughness.
- Gears refer to foreign imported software-assisted design to obtain the best tooth shape to reduce noise.
- The input terminal is connected to the motor shaft in a double-tight manner to obtain the maximum clamping force and zero backlash power transmission.

INDICATION FOR MODEL

SELECTION
机种型号表示

W – AE – 010 – 010 – K – P2 – 马达型号 Motor reference

- W: 品牌 Brand
- AE: 系列 Model
  - AB
  - AD
  - AE
- 010: 规格 Size
  - 050
  - 070
  - 090
  - 120
  - 155
  - 205
  - 235
- 010: 减速比 Ratio
  - 3
  - 4
  - 5
  - 6
  - 7
  - 8
  - 10
  - 15
  - 20
  - 25
  - 35
  - 40
  - 50
  - 60
  - 70
  - 80
  - 100
- K: K-键 S-光轴
- P2: 精度 Precision
  - P1 精密背隙 Precision backlash
  - P2 标准背隙 Standard backlash
  - PO 超精密背隙 Super precision backlash
- 马达型号 Motor reference

GENERAL NOTICES
订货须知

- 机种、型号、扭矩
- 减速比或出力轴转速
- 工况及连接方式
- 数量及安装的机械名称
- 入力方式和入力转速
- 马达厂牌型号或法兰及马达轴尺寸

- Type, model and torque
- Ratio or output speed
- Working conditions and connection methods
- Quantity and installed machine name
- Input mode and input speed
- Motor brand model or flange and motor shaft size

PLANETARY GEARBOX

● 减速机性能资料/Performance

规格 Specification	单位 Unit	节数 Stage	减速比 Ratio	WAE050	WAE070	WAE090	WAE120	WAE155	WAE205	WAE235
额定输出力矩 Rated output torque T_{2N}	Nm	1	3	20	55	130	208	342	588	1140
			4	19	50	140	290	542	1050	1700
			5	22	60	160	330	650	1200	2000
			6	20	55	150	310	600	1100	1900
			7	19	50	140	300	550	1100	1800
			8	17	45	120	260	500	1000	1600
			10	14	40	100	230	450	900	1500
		2	15	20	55	130	208	342	588	1140
			20	19	50	140	290	542	1050	1700
			25	22	60	160	330	650	1200	2000
			30	20	55	150	310	600	1100	1900
			35	19	50	140	300	550	1100	1800
			40	17	45	120	260	500	1000	1600
			50	22	60	160	330	650	1200	2000
			60	20	55	150	310	600	1100	1900
			70	19	50	140	300	550	1100	1800
			80	17	45	120	260	500	1000	1600
			100	14	40	100	230	450	900	1500
急停扭矩 /Emergency stop torque T_{2NOT}	Nm	1,2	3～100	三倍额定输出力矩 /Triple rated output torque						
额定输入转速/Rated input speed n_{1N}	rpm	1,2	3～100	5000	5000	4000	4000	3000	3000	2000
最大输入转速/Maximum iutput speed n_{1B}		1,2	3～100	10000	10000	8000	8000	6000	6000	4000
超精密背隙/Super precision backlash P0	arcmin	1	3～10	–	≤2	≤2	≤2	≤2	≤2	≤2
		2	15～100	–	≤3	≤3	≤3	≤3	≤3	≤3
精密背隙 /Precision backlash P1	arcmin	1	3～10	-	≤3	≤3	≤3	≤3	≤3	≤3
		2	15～100	-	≤5	≤5	≤5	≤5	≤5	≤5
标准背隙 /Standard backlash P2	arcmin	1	3～10	≤12	≤5	≤5	≤5	≤5	≤5	≤5
		2	15～100	≤1	≤8	≤8	≤8	≤8	≤8	≤8
扭转刚性 /Torsional rigidity	Nm/arcmin	1,2	3～100	3	7	14	25	50	145	225
容许径向力/Allowable radial force F_{2aB}	N	1,2	3～100	780	1530	3250	6700	9400	14500	50000
容许轴向力/Allowable axial force F_{2aB}	N	1,2	3～100	390	765	1625	3350	4700	7250	25000
使用寿命 /Lifespan	hr	1,2	3～100	20000						
效率 /Efficiency	%	1	3～10	≥97%						
		2	15～100	≥94%						
重量 /Weight	kg	1	3～10	0.6	1.2	3.7	7.5	16	36	53
		2	15～100	0.7	1.6	4.2	10.7	17	37	54
使用温度 /Working temperature	℃	1,2	3～100	–10℃～90℃						
润滑 /Lubricating		1,2		合成润滑油脂 /Synthetic lubricating grease						
防护等级 /IP Grade		1,2	3～100	IP65						
安装方向 /Installation direction		1,2	3～100	任意方向 /In any direction						
噪音值(n1=3000rpm,无负载) Noise level（n1=3000rpm,off load）	dB(A)	1,2	3～100	≤56	≤58	≤60	≤63	≤65	≤67	≤70

ROTATIONAL INERTIA OF REDUCER

● 减速机转动惯量

规格 Specification	单位 Unit	节数 Stage	减速比 Ratio	WAE050	WAE070	WAE090	WAE120	WAE155	WAE205	WAE235
转动惯量J1 Rotational inertia J1	kg・cm²	1	3	0.03	0.16	0.61	3.25	9.21	28.98	69.61
			4	0.03	0.14	0.48	2.74	7.54	23.67	54.37
			5	0.03	0.13	0.47	2.71	7.42	23.29	53.27
			6	0.03	0.13	0.45	2.65	7.25	22.75	51.72
			7	0.03	0.13	0.45	2.62	7.14	22.48	50.97
			8	0.03	0.13	0.44	2.58	7.07	22.59	50.84
			10	0.03	0.13	0.44	2.57	7.03	22.51	50.56
		2	15	0.03	0.03	0.13	0.47	2.71	7.42	23.29
			20	0.03	0.03	0.13	0.47	2.71	7.42	23.29
			25	0.03	0.03	0.13	0.47	2.71	7.42	23.29
			30	0.03	0.03	0.13	0.47	2.71	7.42	23.29
			35	0.03	0.03	0.13	0.47	2.71	7.42	23.29
			40	0.03	0.03	0.13	0.47	2.71	7.42	23.29
			50	0.03	0.03	0.13	0.44	2.57	7.03	22.51
			60	0.03	0.03	0.13	0.44	2.57	7.03	22.51
			70	0.03	0.03	0.13	0.44	2.57	7.03	22.51
			80	0.03	0.03	0.13	0.44	2.57	7.03	22.51
			100	0.03	0.03	0.13	0.44	2.57	7.03	22.51

1.减速比（$i=N_{in}/N_{out}$）
1. Ratio（$i=N_{in}/N_{out}$）

2.最大加速力矩 T_{2B} =60% of T_{2NOT}
2. Maximum acceleration torque T_{2B} =60% of T_{2NOT}

3.输出转数 100rpm ,作用于输出轴中心位置
3. Output speed100rpm,acting on the center of the output shaft

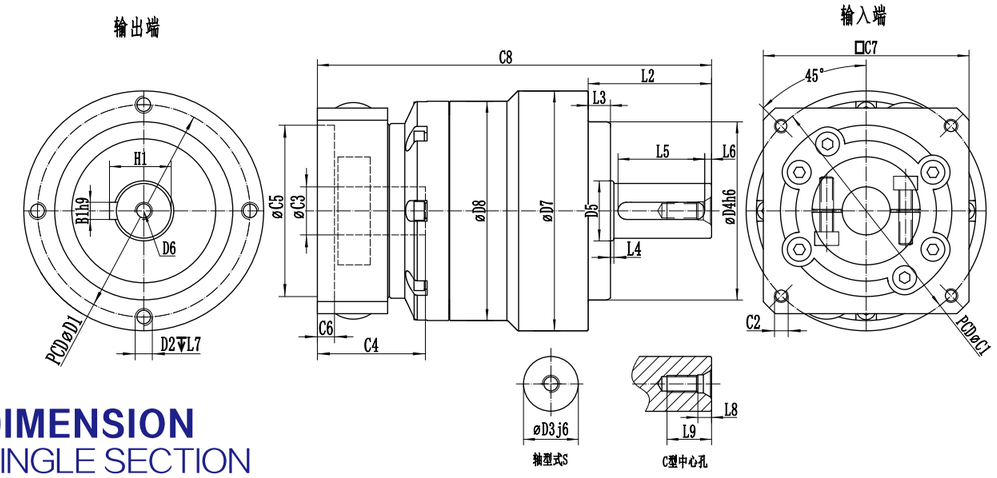

DIMENSION
SINGLE SECTION

- 尺寸（单节，减速比 i=3～10）
  Dimension(single stage,Ratio i=3~10)

尺寸/Dimension	WAE050	WAE070	WAE090	WAE120	WAE155	WAE205	WAE235
D1	44	62	80	108	140	184	210
D2	M4*0.7P	M5*0.8P	M6*1.0P	M8*1.25P	M10*1.5P	M12*1.75P	M16*2.0P
D3 j6	12	16	22	32	40	55	75
D4 g6	35	52	68	90	120	160	180
D5	15	18	30	40	50	70	85
D6	M4*0.7P	M5*0.8P	M8*1.25P	M12*1.75P	M16*2.0P	M20*2.5P	M20*2.5P
D7	50	70	90	120	155	205	235
D8	53	64	94	125	150	200	225
L1	-	-	-	-	-	-	-
L2	24.5	36	46	70	97	100	126
L3	4	6.5	8	17	15	15	18
L4	1	1	1	1.5	3	3	3
L5	14	25	32	40	63	70	90
L6	2	2	3	5	5	6	7
L7	10	10	12	16	20	22	28
L8	3.2	4.8	7.2	10	12	15	15
L9	10	12.5	19	28	36	42	42
C1	46	70 90	90 145	145 200	200	200	235
C2	M4*0.7P	M4 M5	M5 M8	M8 M12	M12*1.75P	M12*1.75P	M12*1.75P
C3	≤8	≤14 ≤19	≤19 ≤24	≤24 ≤35	≤35/≤42	≤42	≤42/≤55
C4	26	31.5 41	41 59	60 81	81	114	117
C5	30	50 70	70 110	110 114.3	114.3	114.3	200
C6	5	5 5	6 14	14 19	19	24	20
C7	42	60 80	80 130	130 180	180	180	220
C8	86	115 128	145 163	199.5 221.5	279	318	377
B1 h9	4	5	6	10	12	16	20
H1	13.5	18	24.5	35	43	59	79.5

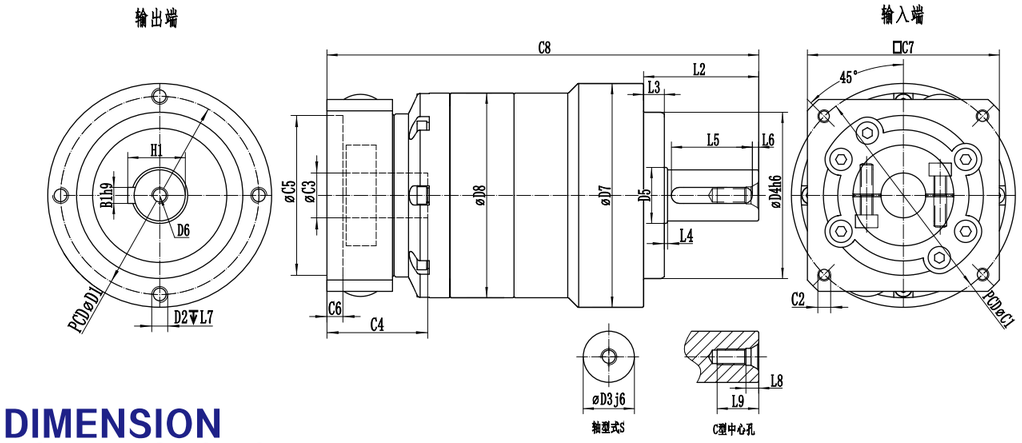

DIMENSION
DOUBLE SECTION

- 尺寸（双节，减速比 i=15～100）
  Dimension(double stage,Ratio i=15~100)

尺寸/Dimension	WAE050	WAE070	WAE090	WAE120	WAE155	WAE205	WAE235
D1	44	62	80	108	140	184	210
D2	M4*0.7P	M5*0.8P	M6*1.0P	M8*1.25P	M10*1.5P	M12*1.75P	M16*2.0P
D3 j6	12	16	22	32	40	55	75
D4 g6	35	52	68	90	120	160	180
D5	15	18	30	40	50	70	85
D6	M4*0.7P	M5*0.8P	M8*1.25P	M12*1.75P	M16*2.0P	M20*2.5P	M20*2.5P
D7	50	70	90	120	155	205	235
D8	53	64	94	125	150	200	225
L1	-	-	-	-	-	-	-
L2	24.5	36	46	70	97	100	126
L3	4	6.5	8	17	15	15	18
L4	1	1	1	1.5	3	3	3
L5	14	25	32	40	63	70	90
L6	2	2	3	5	5	6	7
L7	10	10	12	16	20	22	28
L8	3.2	4.8	7.2	10	12	15	15
L9	10	12.5	19	28	36	42	42
C1	46	70 90	70 90 145	90 145	145	200	200
C2	M4*0.7P	M4 M5	M4 M5 M8	M5 M8	M8*1.25P	M12*1.75P	M12*1.75P
C3	≤8	≤14 ≤19	≤14 ≤19 ≤24	≤19 ≤24	≤24/≤28	≤35	≤42
C4	26	31.5 41	31.5 41 59	41 60	66	80	114
C5	30	50 70	50 70 110	70 110	110	114.3	114.3
C6	5	5 5	5 6 14	6 14	10	9	24
C7	42	60 80	60 80 130	80 130	130	180	180
C8	107	141.5 154.5	162.5 179 197	214 244.5	340	352.5	441.5
B1 h9	4	5	6	10	12	16	20
H1	13.5	18	24.5	35	43	59	79.5

WPF Series planetary gearbox
系列行星减速机

FEATURES
产品特点

- 行星臂架与输出轴采用一体式结构设计，确保最大的扭转刚性。
- 行星轮采用满滚针设计，增加接触面积以提高结构刚性与输出扭矩。
- 齿轮采用低碳钢表面渗碳淬火到HRC62，以获得最佳的耐磨及冲击韧性。
- 齿形引用国外进口软件辅助设计，以获得最佳的齿形降低噪音。
- 输入端与马达轴连接采用双边抱紧方式，以获取最大的夹紧力和零背隙的动力传递。

- Planetary boom and output shaft are intergrated structure designed to ensure maximum torsional rigidity.
- Planetary wheel with full needle design,increase the contact area to improve the rigidity and output torque.
- The gears are carburized and quenched to the HRC62 with low carbon steel surface for optimum wear and impact toughness.
- Gears refer to foreign imported software-assisted design to obtain the best tooth shape to reduce noise.
- The input terminal is connected to the motor shaft in a double-tight manner to obtain the maximum clamping force and zero backlash power transmission.

INDICATION FOR MODEL
SELECTION
机种型号表示

W – PF – 090 – 010 – K – P2 – 马达型号 Motor reference

- W: 品牌 Brand
- PF: 系列 Model; PF; PL
- 090: 规格 Size; 060, 080, 090, 115, 142
- 010: 减速比 Ratio; 3, 4, 5, 6, 7, 8, 10, 15, 20, 25, 35, 40, 50, 70, 100
- K: K-键 K-Key; S-光轴 S-Smooth
- P2: 精度 Precision; P2标准背隙 Standard backlash
- 马达型号 Motor reference

GENERAL NOTICES
订货须知

- 机种、型号、扭矩
- 减速比或出力轴转速
- 工况及连接方式
- 数量及安装的机械名称
- 入力方式和入力转速
- 马达厂牌型号或法兰及马达轴尺寸

- Type, model and torque
- Ratio or output speed
- Working conditions and connection methods
- Quantity and installed machine name
- Input mode and input speed
- Motor brand model or flange and motor shaft size

PLANETARY GEARBOX

减速机性能资料/Performance

规格 Specification	单位 Unit	节数 Stage	减速比 Ratio	WPF042	WPF060	WPF080	WPF090	WPF115	WPF142
额定输出力矩 Rated output torque T_{2N}	Nm	1	3	8	18	40	50	125	290
			4	12	36	90	110	230	460
			5	16	40	110	125	260	550
			6	8	20	40	50	90	340
			7	8	20	40	50	90	340
			8	5	12	22	32	70	210
			10	5	12	22	32	70	210
		2	12	12	36	90	110	230	460
			15	16	40	110	125	260	550
			16	12	36	90	110	230	460
			20	12	40	110	125	260	550
			25	16	40	110	125	260	550
			28	8	36	90	110	230	460
			30	16	18	40	50	125	290
			35	12	40	110	125	260	550
			40	16	36	90	110	230	460
			50	-	40	110	125	260	550
			60	8	20	40	50	90	340
			70	5	20	40	50	90	340
			80		12	22	32	70	210
			100		12	22	32	70	210
装置马达轴孔径/Motor shaft size	mm	1,2	3–100	5-8	6–14	14–19	14–19	16–24	19–35
最大输出扭矩/Maximum output torque	Nm	1,2	3–100	二倍额定输出力矩/Double rated output torque					
额定输入转速/Rated input speed n_{1N}	rpm	1,2	3–100	4000	4000	3500	3500	3500	2500
背隙/Backlash	arcmin	1	3–10	≤20	≤10	≤10	≤10	≤10	≤10
		2	12–100	≤22	≤12	≤12	≤12	≤12	≤12
扭转刚性/Torsional rigidity	Nm/arcmin	1,2	3–100	0.7	1.8	4.7	4.85	11	55
容许径向力/Allowable radial force F_{2aB}	N	1,2	3–100	165	220	400	430	1000	4500
容许轴向力/Allowable axial force F_{2aB}	N	1,2	3–100	135	240	420	450	1240	4800
使用寿命/Lifespan	hr	1,2	3–100	10000					
效率/Efficiency	%	1	3–10	≥96					
		2	12–100	≥93					
重量/Weight	kg	1	3–10	0.35	1.1	2.1	4.4	6.6	14
		2	12–100	0.45	1.4	3	5	8.2	17.1
使用温度/Working temperature	℃	1,2	3–100	–10℃~80℃					
防护等级/IP Grade		1,2	3–100	IP54					
润滑/Lubricating				合成润滑油脂/Synthetic lubricating grease					
安装方向/Installation direction		1,2	3–100	任意方向/In any direction					
噪音值(n1=3000rpm, 无负载) Noise level (n1=3000rpm,off load)	dB(A)	1,2	3–100	≤58	≤61	≤63	≤63	≤68	≤75

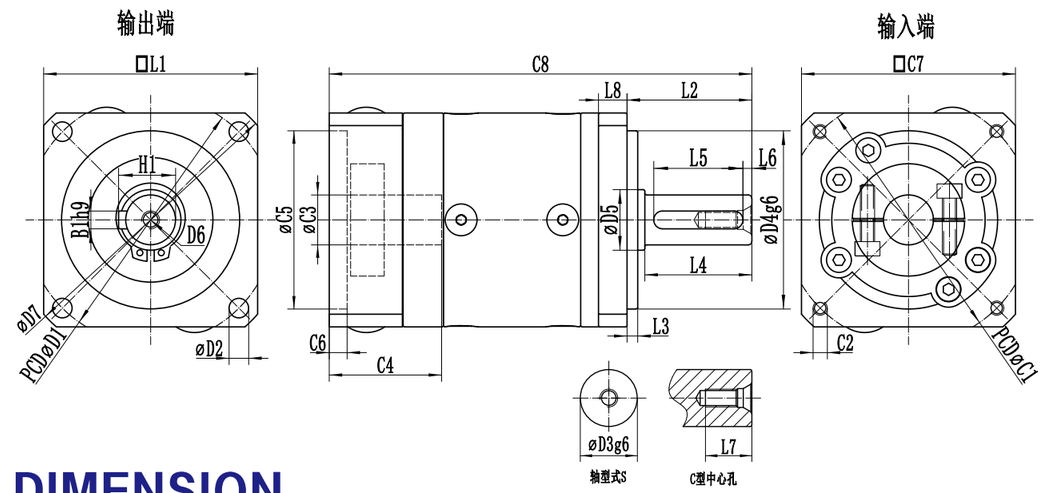

DIMENSION

SINGLE SECTION

- 尺寸（单节，减速比 i=3～10）

Dimension(single stage,Ratio i=3~10)

尺寸/Dimension	WPF042-L1	WPF060-L1	WPF080-L1	WPF090-L1	WPF115-L1	WPF142-L1
※D1	50	70	100	110	130	185
※D2	4.5	5.5	6.5	6.5	8.5	11
※D3	10	14	20	22	25	40
※D4	26	50	80	85	110	130
D5	12	17	25	30	35	55
D6	M4	M5	M6	M6	M10	M12
D7	58	80	120	125	160	230
L1	42	60	90	92	120	176
※L2	26	35	40	46	55	87
※L3	2	3	3	5	4	5
L4	22.5	30	36	36	50	80
※L5	16	25	25	32	40	70
L6	2.5	2.5	5	2	5	5
L7	10	12.5	18	18	23	25
L8	5	8	10	10	14	15
*C1	46	70	90	90	145	200
*C2	M4	M4	M5	M5	M8	M12
*C3	5-8	6–14	14–19	14–19	19–24	24–35
*C4	26	31.5	41	41	60	83
*C5	30	50	70	70	110	114.3
*C6	5	5	6	5	14	10
C7	42	60	80	80	130	180
C8	86	118.5	146.5	166	204.5	268.5
※B1	3	5	6	6	8	12
※H1	11.2	16	22.5	24.5	28	43

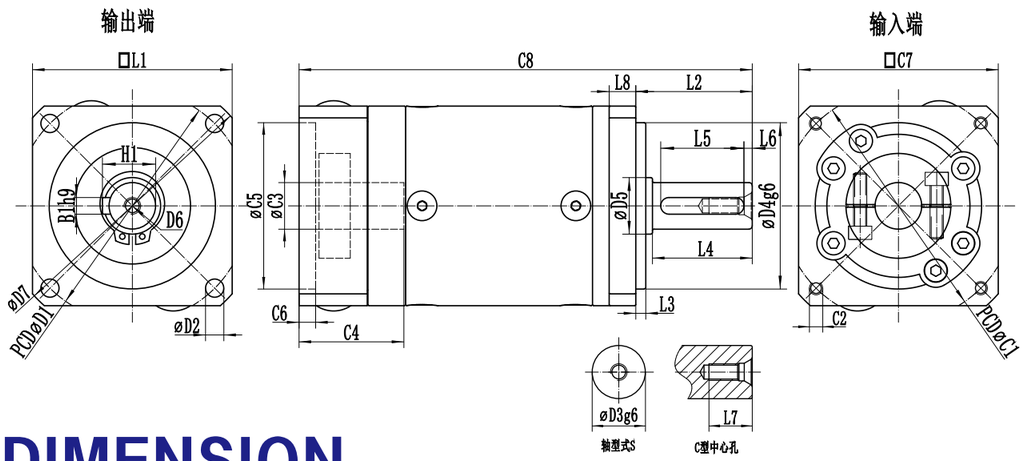

DIMENSION

DOUBLE SECTION

- 尺寸（双节，减速比 i=15～100）
  Dimension(double stage,Ratio i=15~100)

尺寸/Dimension	WPF042-L2	WPF060-L2	WPF080-L2	WPF090-L2	WPF115-L2	WPF142-L2
※D1	50	70	100	110	130	185
※D2	4.5	5.5	6.5	6.5	8.5	11
※D3	10	14	20	22	25	40
※D4	26	50	80	85	110	130
D5	12	17	25	30	35	55
D6	M4	M5	M6	M6	M10	M12
D7	58	80	120	125	160	230
L1	42	60	90	92	120	176
※L2	26	35	40	46	55	87
※L3	2	3	3	5	4	5
L4	22.5	30	36	36	50	80
※L5	16	25	25	32	40	70
L6	2.5	2.5	5	2	5	5
L7	10	12.5	18	18	23	25
L8	5	8	10	10	14	15
*C1	46	70	90	90	145	200
*C2	M4	M4	M5	M5	M8	M12
*C3	5-8	6–14	14–19	14–19	19–24	24–35
*C4	26	31.5	41	41	60	83
*C5	30	50	70	70	110	114.3
*C6	5	5	6	5	14	10
C7	42	60	80	80	130	180
C8	104	136.2	169.6	190.5	237	313.5
※B1	3	5	6	6	8	12
※H1	11.2	16	22.5	24.5	28	43

WPL

Series planetary gearbox
系列行星减速机

FEATURES
产品特点

- 行星臂架与输出轴采用一体式结构设计，确保最大的扭转刚性。
- 行星轮采用满滚针设计，增加接触面积以提高结构刚性与输出扭矩。
- 齿轮采用低碳钢表面渗碳淬火到HRC62，以获得最佳的耐磨及冲击韧性。
- 齿形引用国外进口软件辅助设计，以获得最佳的齿形降低噪音。
- 输入端与马达轴连接采用双边抱紧方式，以获取最大的夹紧力和零背隙的动力传递。

- Planetary boom and output shaft are intergrated structure designed to ensure maximum torsional rigidity.
- Planetary wheel with full needle design,increase the contact area to improve the rigidity and output torque.
- The gears are carburized and quenched to the HRC62 with low carbon steel surface for optimum wear and impact toughness.
- Gears refer to foreign imported software-assisted design to obtain the best tooth shape to reduce noise.
- The input terminal is connected to the motor shaft in a double-tight manner to obtain the maximum clamping force and zero backlash power transmission.

INDICATION FOR MODEL

SELECTION

- 机种型号表示

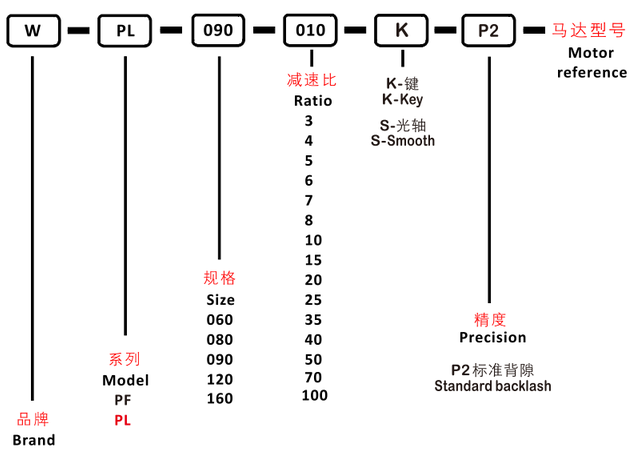

GENERAL NOTICES

- 订货须知

- 机种、型号、扭矩
- 减速比或出力轴转速
- 工况及连接方式
- 数量及安装的机械名称
- 入力方式和入力转速
- 马达厂牌型号或法兰及马达轴尺寸

- Type, model and torque
- Ratio or output speed
- Working conditions and connection methods
- Quantity and installed machine name
- Input mode and input speed
- Motor brand model or flange and motor shaft size

PLANETARY GEARBOX

- 减速机性能资料 /Performance

规格 Specification	单位 Unit	节数 Stage	减速比 Ratio	WPL042	WPL060	WPL080	WPL090	WPL120	WPL160
额定输出力矩 Rated output torque T_{2N}	Nm	1	3	8	18	40	50	125	290
			4	12	36	90	110	230	460
			5	16	40	110	125	260	550
			6	8	20	40	50	90	340
			7	8	20	40	50	90	340
			8	5	12	22	32	70	210
			10	5	12	22	32	70	210
		2	12	12	36	90	110	230	460
			15	16	40	110	125	260	550
			16	12	36	90	110	230	460
			20	12	40	110	125	260	550
			25	16	40	110	125	260	550
			28	8	36	90	110	230	460
			30	16	18	40	50	125	290
			35	12	40	110	125	260	550
			40	16	36	90	110	230	460
			50	-	40	110	125	260	550
			60	8	20	40	50	90	340
			70	5	20	40	50	90	340
			80		12	22	32	70	210
			100		12	22	32	70	210
装置马达轴孔径/Motor shaft size	mm	1,2	3–100	5-8	6–14	14–19	14–19	16–24	19–35
最大输出扭矩/Maximum output torque	Nm	1,2	3–100	二倍额定输出力矩/Double rated output torque					
额定输入转速/Rated input speed n_{1N}	rpm	1,2	3–100	4000	4000	3500	3500	3500	2500
背隙/Backlash	arcmin	1	3–10	≤20	≤10	≤10	≤10	≤10	≤10
		2	12–100	≤22	≤12	≤12	≤12	≤12	≤12
扭转刚性/Torsional rigidity	Nm/arcmin	1,2	3–100	0.7	1.8	4.7	4.85	11	55
容许径向力/Allowable radial force F_{2aB}	N	1,2	3–100	165	220	400	430	1000	4500
容许轴向力/Allowable axial force F_{2aB}	N	1,2	3–100	135	240	420	450	1240	4800
使用寿命/Lifespan	hr	1,2	3–100	10000					
效率/Efficiency	%	1	3–10	≥96					
		2	12–100	≥93					
重量/Weight	kg	1	3–10	0.35	1.1	2.1	4.4	6.6	26.5
		2	12–100	0.45	1.4	3	5	8.2	29.6
使用温度/Working temperature	℃	1,2	3–100	–10℃~80℃					
防护等级/IP Grade		1,2	3–100	IP54					
润滑/Lubricating				合成润滑油脂/Synthetic lubricating grease					
安装方向/Installation direction		1,2	3–100	≤58	任意方向/In any direction				
噪音值(n1=3000rpm, 无负载) Noise level (n1=3000rpm,off load)	dB(A)	1,2	3–100		≤61	≤63	≤63	≤68	≤75

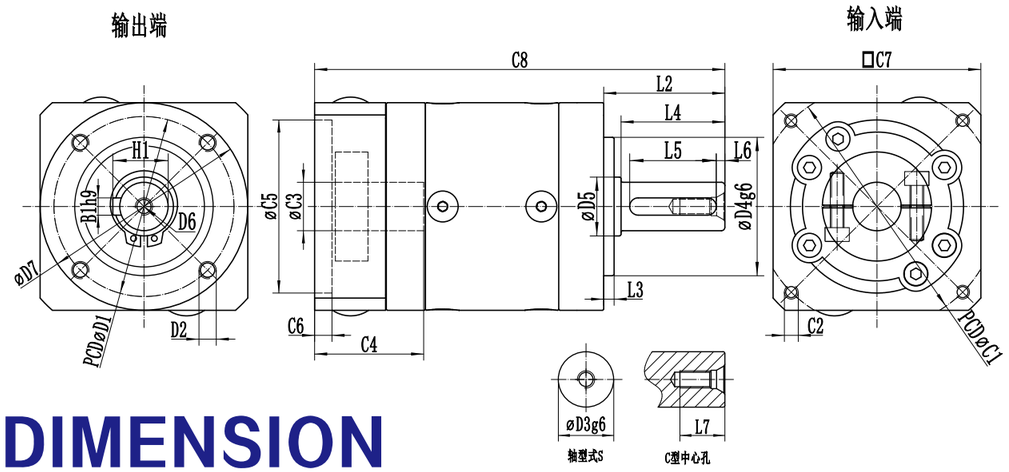

DIMENSION

SINGLE SECTION

- 尺寸（单节，减速比 i=3～10）

Dimension(single stage,Ratio i=3~10)

尺寸/Dimension	WPL042-L1	WPL060-L1	WPL080-L1	WPL090-L1	WPL120-L1	WPL160-L1
※D1	34	52	70	80	100	145
※D2	M4	M5	M6	M6	M10	M12
※D3	10	14	20	22	25	40
※D4	26	40	60	68	80	130
D5	12	17	25	30	35	55
D6	M4	M5	M6	M6	M10	M12
D7	42	60	80	90	115	162
L1	-	-	-	-	-	-
※L2	26	35	40	46	55	87
※L3	2	3	3	5	4	5
L4	22.5	30	36	36	50	80
※L5	16	25	25	32	40	70
L6	2.5	2.5	5	2	5	5
L7	10	12.5	18	18	23	25
L8	-	-	-	-	-	-
*C1	46	70	90	90	145	200
*C2	M4	M4	M5	M5	M8	M12
*C3	5-8	6-14	14-19	14-19	19-24	24-35
*C4	26	31.5	41	41	60	83
*C5	30	50	70	70	110	114.3
*C6	5	5	6	5	14	10
C7	42	60	80	80	130	180
C8	86	118.5	146.5	166	204.5	268.5
※B1	3	5	6	6	8	12
※H1	11.2	16	22.5	24.5	28	43

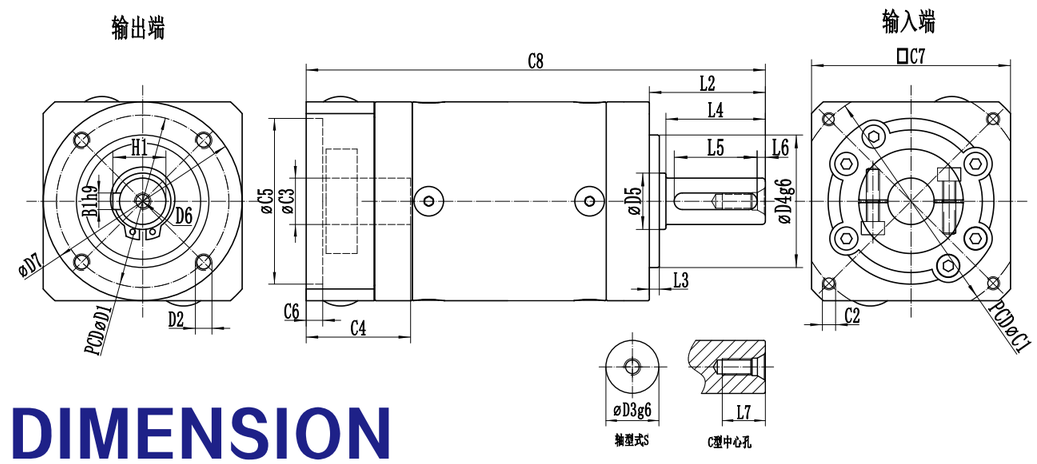

DIMENSION

DOUBLE SECTION

- 尺寸（双节，减速比 i=15～100））

Dimension(double stage,Ratio i=15~100)

尺寸/Dimension	WPL042-L1	WPL060-L2	WPL080-L2	WPL090-L2	WPL120-L2	WPL160-L2
※D1	34	52	70	80	100	145
※D2	M4	M5	M6	M6	M10	M12
※D3	10	14	20	22	25	40
※D4	26	40	60	68	80	130
D5	12	17	25	30	35	55
D6	M4	M5	M6	M6	M10	M12
D7	42	60	80	90	115	162
L1	-	-	-	-	-	-
※L2	26	35	40	46	55	87
※L3	2	3	3	5	4	5
L4	22.5	30	36	36	50	80
※L5	16	25	25	32	40	70
L6	2.5	2.5	5	2	5	5
L7	10	12.5	18	18	23	25
L8	-	-	-	-	-	-
*C1	46	70	90	90	145	200
*C2	M4	M4	M5	M5	M8	M12
*C3	5-8	6-14	14-19	14-19	19-24	24-35
*C4	26	31.5	41	41	60	83
*C5	30	50	70	70	110	114.3
*C6	5	5	6	5	14	10
C7	42	60	80	80	130	180
C8	104	136.2	169.6	190.5	237	313.5
※B1	3	5	6	6	8	12
※H1	11.2	16	22.5	24.5	28	43

WABR Series planetary gearbox
系列行星减速机

FEATURES
产品特点

- 行星臂架与输出轴采用一体式结构设计， 确保最大的扭转刚性。
- 行星轮采用满滚针设计，增加接触面积以提高结构刚性与输出扭矩。
- 齿轮采用低碳钢表面渗碳淬火到HRC62，以获得最佳的耐磨及冲击韧性。
- 齿形引用国外进口软件辅助设计，以获得最佳的齿形降低噪音。
- 输入端与马达轴连接采用双边抱紧方式，以获取最大的夹紧力和零背隙的动力传递。
- 采用蜗线伞齿轮设计，容许输出扭矩高、比直伞齿轮高30%以上。
- 高容许输入转速，比直伞齿轮输入高8倍以上。
- 蜗线伞齿轮的啮合齿印，经最佳优化设计，接触齿面负载均一，运转寿命长。
- 蜗线伞齿轮啮合，经最佳运动误差分析与严格的制程控制，以确保高精度的运转背隙。

- Planetary boom and output shaft are intergrated structure designed to ensure maximum torsional rigidity.
- Planetary wheel with full needle design,increase the contact area to improve the rigidity and output torque.
- The gears are carburized and quenched to the HRC62 with low carbon steel surface for optimum wear and impact toughness.
- Gears refer to foreign imported software-assisted design to obtain the best tooth shape to reduce noise.
- The input terminal is connected to the motor shaft in a double-tight manner to obtain the maximum clamping force and zero backlash power transmission.
- Adopt spiral bevel gear design, allow high output torque, more than 30% higher than straight bevel gear.
- High tolerance input speed, more than 8 times higher than straight bevel gear input.
- The meshing tooth imprint of spiral bevel gear has been optimized by optimum design, and the contact tooth surface load is uniform, and long running life.
- Cochlear bevel gears are meshed by optimum motion error analysis and strict process control to ensure high precision running back clearance.

INDICATION FOR MODEL
SELECTION
- 机种型号表示

W – ABR – 090 – 010 – K – P2 – 马达型号 Motor reference

- W: 品牌 Brand
- ABR: 系列 Model ABR
- 090: 规格 Size 042 060 090 115 142 180
- 010: 减速比 Ratio 3 4 5 6 7 8 10 15 20 25 35 40 50 60 70 80 100 …… 200
- K: K-键 K-Key; S-光轴 S-Smooth
- P2: 精度 Precision; P1 精密背隙 Precision backlash; P2 标准背隙 Standard backlash

GENERAL NOTICES
- 订货须知

- 机种、型号、扭矩
- 减速比或出力轴转速
- 工况及连接方式
- 数量及安装的机械名称
- 入力方式和入力转速
- 马达厂牌型号或法兰及马达轴尺寸

- Type, model and torque
- Ratio or output speed
- Working conditions and connection methods
- Quantity and installed machine name
- Input mode and input speed
- Motor brand model or flange and motor shaft size

PLANETARY GEARBOX

减速机性能资料 /Performance

规格 Specification	单位 Unit	节数 Stage	减速比 Ratio	WABR042	WABR060	WABR090	WABR115	WABR142	WABR180
额定输出力矩 Rated output torque T_{2N}	Nm	1	3	-	36	90	195	342	588
			4	-	48	120	260	520	1040
			5	-	60	150	325	650	1200
			6	-	55	150	310	600	1100
			7	-	50	140	300	550	1100
			8	-	50	140	290	542	1050
			10	-	60	160	330	650	1200
			12	-	55	150	310	600	1100
			14	-	50	140	300	550	1100
			20	-	40	100	230	450	900
		2	15	-	55	130	208	342	588
			25	-	60	150	325	650	1200
			30	-	55	150	310	600	1100
			35	-	50	140	300	550	1100
			40	-	50	140	290	542	1050
			50	-	60	160	330	650	1200
			60	-	55	150	310	600	1100
			70	-	50	140	300	550	1100
			80	-	50	140	290	542	1050
			100	-	60	160	330	650	1200
			120	-	55	150	310	600	1100
			140	-	50	140	300	550	1100
			160	-	45	120	260	500	1000
			200	-	40	100	230	450	900
急停扭矩 /Emergency stop torque T_{2NOT}	Nm	1,2	3~200	三倍额定输出力矩 /Triple rated output torque					
额定输入转速/Rated input speed n_{1N}	rpm	1,2	3~200	5000	5000	4000	4000	3000	3000
最大输入转速 /Maximum iutput speed n_{1B}	rpm	1,2	3~200	10000	10000	8000	8000	6000	6000
精密背隙 /Precision backlash P1*	arcmin	1	3~20	-	≤8	≤8	≤8	≤8	≤8
		2	15~200	-	≤10	≤10	≤10	≤10	≤10
标准背隙 /Standard backlash P2*	arcmin	1	3~20	-	≤10	≤10	≤10	≤10	≤10
		2	15~200	-	≤13	≤13	≤13	≤13	≤13
扭转刚性 /Torsional rigidity	Nm/arcmin	1,2	3~200	-	7	14	25	50	145
容许径向力 /Allowable radial force F_{2aB}	N	1,2	3~200	780	1530	3250	6700	9400	14500
容许轴向力/Allowable axial force F_{2aB}	N	1,2	3~200	390	765	1625	3350	4700	7250
使用寿命 /Lifespan	hr	1,2	3~200	20000 *					
效率 /Efficiency	%	1	3~20	95%					
		2	25~200	92%					
重量 /Weight	kg	1	3~20	-	2.1	6.4	13	24.5	51
		2	25~200	-	1.5	7.8	14.2	27.5	54
使用温度 /Working temperature	℃	1,2	3~200	（-10° C +90° C）					
润滑 /Lubricating				合成润滑脂 /Synthetic lubricating grease					
防护等级 /IP Grade		1,2	3~200	IP65					
安装方向 /Installation direction		1,2	3~200	任意方向 /In any direction					
噪音值(n1=3000rpm,无负载) Noise level（n1=3000rpm,off load）	dB(A)	1,2	3~200	-	≤63	≤65	≤68	≤70	≤72

（带“*”的精度需与工程师确认/ Need confirm with our engineer for those precision data with *）

减速机转动惯量 /Rotational inertia

规格 Specification	单位 Unit	节数 Stage	减速比 Ratio	WABR042	WABR060	WABR090	WABR115	WABR142	WABR180
转动惯量J1 Rotational inertia J1	kg.cm²	1	3~10	0.09	0.35	2.25	6.84	23.4	68.9
			12、14	0.035	0.07	1.87	6.25	21.8	65.6
			20	0.03	0.07	1.87	6.25	21.8	65.6
		2	15	0.09	0.35	2.25	6.84	23.4	68.9
			25~100	0.09	0.09	0.35	2.25	6.84	23.4
			120~200	0.007	0.01	0.31	1.87	6.25	21.8

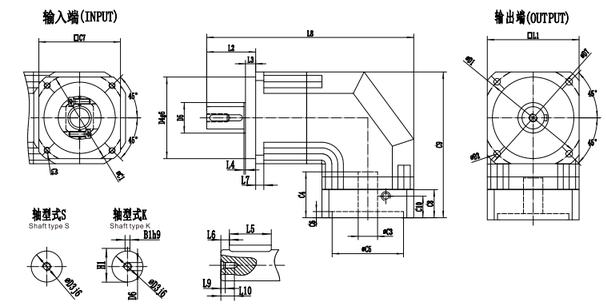

DIMENSION

SINGLE SECTION

尺寸（单节，减速比i=3～20）

Dimension(single stage,Ratio i=3~20)

尺寸/Dimension	WABR042	WABR060	WABR090	WABR115	WABR142	WABR180
D1	-	70	100	130	165	-
D2	-	5.5	6.6	9	11	-
D3j6	-	16	22	32	40	-
D4g6	-	50	80	110	130	-
D5	-	17.5	30	40	49.5	-
D6	-	M5	M8	M12	M16	-
D7	-	80	116	152	185	-
L1	-	60	90	115	142	-
L2	-	37	48	65	97	-
L3	-	7	10	12	15	-
L4	-	1.5	1.5	2	3	-
L5	-	25	32	40	63	-
L6	-	2	3	5	5	-
L7	-	6	8	10	12	-
L8	-	149.5	203	266.5	359	-
L9	-	4	6	10	16	-
L10	-	13	20	28	36	-
C1	-	70	90	145	200	-
C2	-	M4	M5	M8	M12	-
C3G6	-	14	19	24	35	-
C4	-	32.5	54	81	81	-
C5G6	-	50	70	110	114.3	-
C6	-	3.5	6	14	19	-
C7	-	60	80	130	180	-
C8	-	24.2	29.5	45.2	57	-
C9	-	100	145	189.5	246.5	-
C10	-	9.5	14.5	27	32	-
B1	-	5	6	10	12	-
H1	-	18	24.5	35	43	-

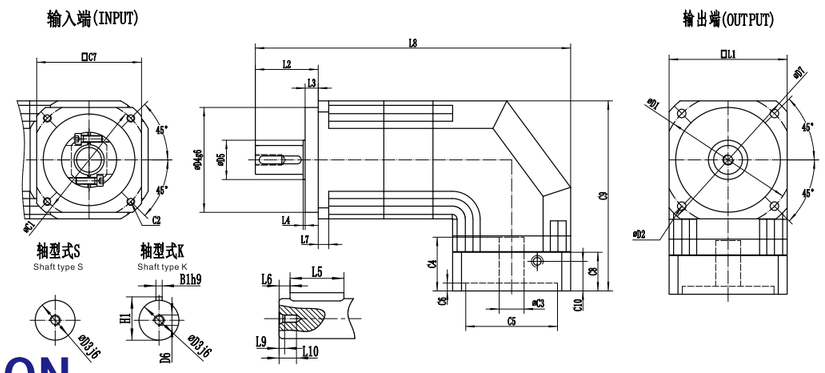

DIMENSION
DOUBLE SECTION

- 尺寸（双节，减速比 i=15～200）型式 I

Dimension(double stage,Ratio i=15~200) TYPE I

尺寸/Dimension	WABR042	WABR060	WABR090	WABR115	WABR142	WABR180
D1	-	70	100	130	165	-
D2	-	5.5	6.6	9	11	-
D3j6	-	16	22	32	40	-
D4g6	-	50	80	110	130	-
D5	-	17.5	30	40	49.5	-
D6	-	M5	M8	M12	M16	-
D7	-	80	116	152	185	-
L1	-	60	90	115	142	-
L2	-	37	48	65	97	-
L3	-	7	10	12	15	-
L4	-	1.5	1.5	2	3	-
L5	-	25	32	40	63	-
L6	-	2	3	5	5	-
L7	-	6	8	10	12	-
L8	-	181.5	240.5	290	420	-
L9	-	4	6	10	16	-
L10	-	13	20	28	36	-
C1	-	70	90	145	200	-
C2	-	M4	M5	M8	M12	-
C3G6	-	14	19	24	35	-
C4	-	32.5	54	54	81	-
C5G6	-	50	70	110	114.3	-
C6	-	3.5	6	11.5	19	-
C7	-	60	80	130	180	-
C8	-	24.2	29.5	43	57	-
C9	-	100	145	170.5	246.5	-
C10	-	9.5	14.5	27	32	-
B1	-	5	6	10	12	-
H1	-	18	24.5	35	43	-

WADR
Series planetary gearbox
系列行星减速机

FEATURES
产品特点

- 行星臂架与输出轴采用一体式结构设计， 确保最大的扭转刚性。
- 行星轮采用满滚针设计，增加接触面积以提高结构刚性与输出扭矩。
- 齿轮采用低碳钢表面渗碳淬火到HRC62，以获得最佳的耐磨及冲击韧性。
- 齿形引用国外进口软件辅助设计，以获得最佳的齿形降低噪音。
- 输入端与马达轴连接采用双边抱紧方式，以获取最大的夹紧力和零背隙的动力传递。
- 采用蜗线伞齿轮设计，容许输出扭矩高、比直伞齿轮高30%以上。
- 高容许输入转速，比直伞齿轮输入高8倍以上。
- 蜗线伞齿轮的啮合齿印，经最佳优化设计，接触齿面负载均一，运转寿命长。
- 蜗线伞齿轮啮合，经最佳运动误差分析与严格的制程控制，以确保高精度的运转背隙。

- Planetary boom and output shaft are intergrated structure designed to ensure maximum torsional rigidity.
- Planetary wheel with full needle design,increase the contact area to improve the rigidity and output torque.
- The gears are carburized and quenched to the HRC62 with low carbon steel surface for optimum wear and impact toughness.
- Gears refer to foreign imported software-assisted design to obtain the best tooth shape to reduce noise.
- The input terminal is connected to the motor shaft in a double-tight manner to obtain the maximum clamping force and zero backlash power transmission.
- Adopt spiral bevel gear design, allow high output torque, more than 30% higher than straight bevel gear.
- High tolerance input speed, more than 8 times higher than straight bevel gear input.
- The meshing tooth imprint of spiral bevel gear has been optimized by optimum design, and the contact tooth surface load is uniform, and long running life.
- Cochlear bevel gears are meshed by optimum motion error analysis and strict process control to ensure high precision running back clearance.

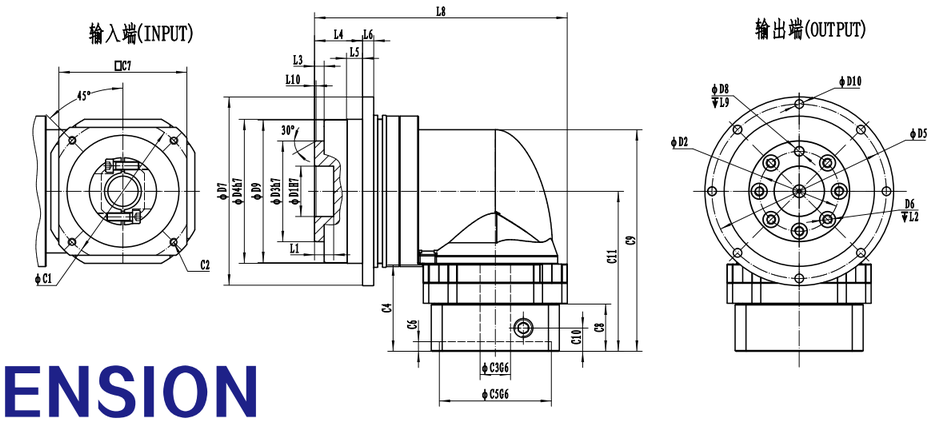

DIMENSION

SINGLE SECTION

- 尺寸（单节，减速比 i=4～20）/Dimension(single stage,Ratio i=4~20)

尺寸/Dimension	WADR064	WADR090	WADR110	WADR140
$D1_{H7}$	20	31.5	40	50
D2	31.5	50	63	80
$D3_{h7}$	40	63	80	100
$D4_{h7}$	64	90	110	140
D5	79	109	135	168
D6	7×M5	7×M6	11×M6	11×M8
D7	86	118	145	179
D8H7	5	6	6	8
D9	63.2	89.2	109.2	139.2
D10	8×4.5	8×5.5	8×5.5	12×6.6
L1	8	12	12	12
L2	9	12	15	17
L3	3	6	6	6
L4	19.5	30	29	38
L5	7	10	10	14.6
L6	4	7	8	10
L8	114.5	158	190	248
L9	6	7	7	7
L10	0.5	1	1	1
C1	70	90	145	200
C2	4×M4	4×M5	4×M8	4×M12
$C3_{G6}$	≦14	≦19/≦24	≦24	≦35/≦42
C4	35	54	81	81
$C5_{G6}$	50	70	110	114.3
C6	3.5	6	14	19
C7	60	80	130	180
C8	24.2	29.5	45	57
C9	104.5	147	194.5	250.5
C10	9.5	14.5	27	32
C11	70	100	132	175.5

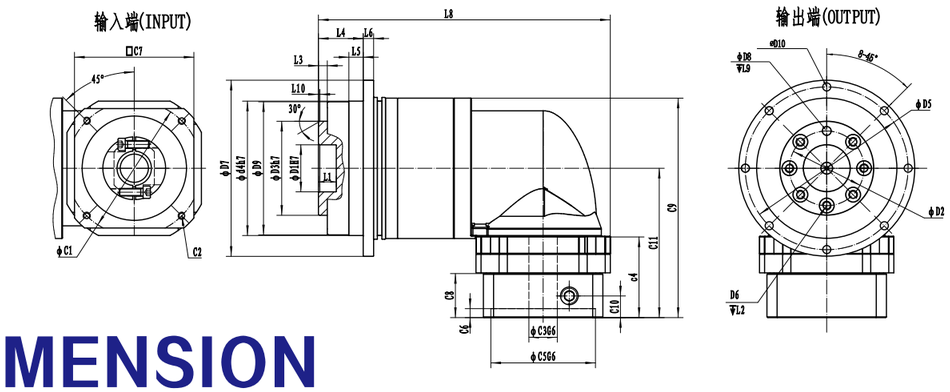

DIMENSION

DOUBLE SECTION

- 尺寸（双节，减速比 i=25～200）/Dimension(double stage,Ratio i=25~200)

尺寸/Dimension	WADR064	WADR090	WADR110	WADR140
$D1_{H7}$	20	31.5	40	50
D2	31.5	50	63	80
$D3_{h7}$	40	63	80	100
$D4_{h7}$	64	90	110	140
D5	79	109	135	168
D6	7×M5	7×M6	11×M6	11×M8
D7	86	118	145	179
D8H7	5	6	6	8
D9	63.2	89.2	109.2	139.2
D10	8×4.5	8×5.5	8×5.5	12×6.6
L1	8	12	12	12
L2	9	12	15	17
L3	3	6	6	6
L4	19.5	30	29	38
L5	7	10	10	14.6
L6	4	7	8	10
L8	146.5	195.5	219.5	325.5
L9	6	7	7	7
L10	0.5	1	1	1
C1	70	90	145	200
C2	4×M4	4×M5	4×M8	4×M12
C3G6	≦14	≦19/≦24	≦24	≦35/≦42
C4	35	54	67	81
C5G6	50	70	110	114.3
C6	3.5	6	11.5	19
C7	60	80	130	180
C8	24.2	29.5	42.5	57
C9	104.5	147	160	250.5
C10	9.5	14.5	27	32
C11	70	100	113	175.5

INDICATION FOR MODEL

SELECTION

● 机种型号表示

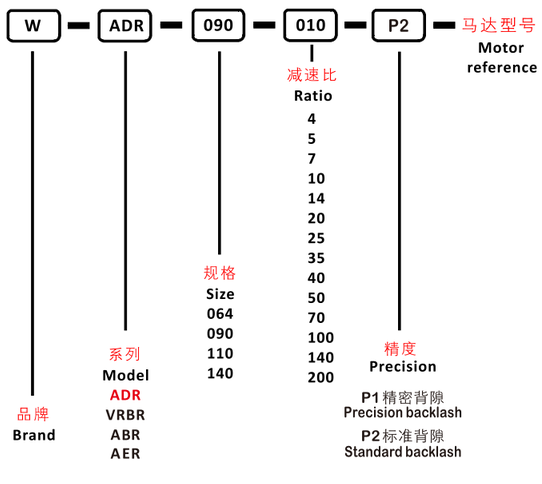

GENERAL NOTICES

● 订货须知

- 机种、型号、扭矩
- 减速比或出力轴转速
- 工况及连接方式
- 数量及安装的机械名称
- 入力方式和入力转速
- 马达厂牌型号或法兰及马达轴尺寸

- Type, model and torque
- Ratio or output speed
- Working conditions and connection methods
- Quantity and installed machine name
- Input mode and input speed
- Motor brand model or flange and motor shaft size

PLANETARY GEARBOX

● 减速机性能资料/Performance

规格 Specification	单位 Unit	节数 Stage	减速比 Ratio	WADR064	WADR090	WADR110	WADR140
额定输出力矩 Rated output torque T_{2N}	Nm	1	4	48	130	270	560
			5	60	160	330	650
			6	50	140	300	550
			7	50	140	300	550
			8	48	130	270	560
			10	60	160	330	650
			14	50	140	300	550
			20	40	100	230	450
		2	25	60	160	330	650
			35	50	140	300	550
			40	48	130	270	560
			50	60	160	330	650
			70	50	140	300	550
			100	60	160	330	650
			140	50	140	300	550
			200	40	100	230	450
急停扭矩/Emergency stop torque T_{2NOT}	Nm	1,2	4~200	三倍额定输出力矩/Triple rated output torque			
额定输入转速/Rated input speed n_{1N}	rpm	1,2	4~200	5000	4000	4000	3000
最大输入转速/Maximum iutput speed n_{1B}	rpm	1,2	4~200	10000	8000	8000	6000
精密背隙/Precision backlash P1*	arcmin	1	4~20	≤8	≤8	≤8	≤8
		2	25~200	≤10	≤10	≤10	≤10
标准背隙/Standard backlash P2*	arcmin	1	4~20	≤10	≤10	≤10	≤10
		2	25~200	≤13	≤13	≤13	≤13
扭转刚性/Torsional rigidity	Nm/arcmin	1,2	4~200	13	31	82	151
最大弯曲力矩 Maximum bending torque M2KB	Nm	1,2	4~200	125	235	430	1300
容许轴向力/Allowable axial force F_{2aB}	N	1,2	4~200	1050	2850	2990	10590
使用寿命/Lifespan	hr	1,2	4~200	20000*			
效率/Efficiency	%	1	4~20	≥95%			
		2	25~200	≥92%			
重量/Weight	kg	1	4~20	1.9	4.5	9.8	20.1
		2	25~200	2.1	5.9	10.5	21.9
使用温度/Working temperature	℃	1,2	4~200	(-10° C +90° C)			
润滑/Lubricating				合成润滑脂/Synthetic lubricating grease			
防护等级/IP Grade		1,2	4~200	IP65			
安装方向/Installation direction		1,2	4~200	任意方向/In any direction			
噪音值(n1=3000rpm,无负载) Noise level (n1=3000rpm,off load)	dB(A)	1,2	4~200	≤63	≤65	≤68	≤70

(带"*"的精度需与工程师确认/Need confirm with our engineer for those precision data with *)

● 减速机转动惯量/Rotational inertia

规格 Specification	单位 Unit	节数 Stage	减速比 Ratio	WADR064	WADR090	WADR110	WADR140
转动惯量J1 Rotational inertia J1	kg.cm²	1	4~10	0.35	2.25	6.84	23.4
			14	0.07	1.87	6.25	21.8
			20	0.07	1.87	6.25	21.8
		2	25~100	0.09	0.35	2.25	6.84
			140~200	–	0.31	1.87	6.25

WVRBR Series planetary gearbox
系列行星减速机

FEATURES
产品特点

- 行星臂架与输出轴采用一体式结构设计， 确保最大的扭转刚性。
- 行星轮采用满滚针设计，增加接触面积以提高结构刚性与输出扭矩。
- 齿轮采用低碳钢表面渗碳淬火到HRC62，以获得最佳的耐磨及冲击韧性。
- 齿形引用国外进口软件辅助设计，以获得最佳的齿形降低噪音。
- 输入端与马达轴连接采用双边抱紧方式，以获取最大的夹紧力和零背隙的动力传递。
- 采用蜗线伞齿轮设计，容许输出扭矩高、比直 伞齿轮高30%以上。
- 高容许输入转速，比直伞齿轮输入高8倍以上。
- 蜗线伞齿轮的啮合齿印，经最佳优化设计，接触齿面负载均一，运转寿命长。
- 蜗线伞齿轮啮合，经最佳运动误差分析与严格的制程控制，以确保高精度的运转背隙。

- Planetary boom and output shaft are intergrated structure designed to ensure maximum torsional rigidity.
- Planetary wheel with full needle design,increase the contact area to improve the rigidity and output torque.
- The gears are carburized and quenched to the HRC62 with low carbon steel surface for optimum wear and impact toughness.
- Gears refer to foreign imported software-assisted design to obtain the best tooth shape to reduce noise.
- The input terminal is connected to the motor shaft in a double-tight manner to obtain the maximum clamping force and zero backlash power transmission.
- Adopt spiral bevel gear design, allow high output torque, more than 30% higher than straight bevel gear.
- High tolerance input speed, more than 8 times higher than straight bevel gear input.
- The meshing tooth imprint of spiral bevel gear has been optimized by optimum design, and the contact tooth surface load is uniform, and long running life.
- Cochlear bevel gears are meshed by optimum motion error analysis and strict process control to ensure high precision running back clearance.

INDICATION FOR MODEL SELECTION
机种型号表示

W – VRBR – 090 – 010 – K – P2 – 马达型号 Motor reference

- W: 品牌 Brand
- VRBR: 系列 Model — ADR, VRBR, ABR, AER
- 090: 规格 Size — 042, 060, 090, 115, 142, 180
- 010: 减速比 Ratio — 3, 4, 5, 6, 7, 8, 10, 12, 14, 15, 20, 25, ……, 200
- K: K-键 K-Key; S-光轴 S-Smooth
- P2: 精度 Precision — P2标准背隙 Standard backlash
- 马达型号 Motor reference

GENERAL NOTICES
订货须知

- 机种、型号、扭矩
- 减速比或出力轴转速
- 工况及连接方式
- 数量及安装的机械名称
- 入力方式和入力转速
- 马达厂牌型号或法兰及马达轴尺寸

- Type, model and torque
- Ratio or output speed
- Working conditions and connection methods
- Quantity and installed machine name
- Input mode and input speed
- Motor brand model or flange and motor shaft size

● 减速机性能资料/Performance

规格 Specification	单位 Unit	节数 Stage	减速比 Ratio	WVRBR042	WVRBR060	WVRBR090	WVRBR115	WVRBR140	WVRBR180
额定输出力矩 Rated output torque T_{2N}	Nm	1	3	-	36	90	195	342	588
			4	-	48	120	260	520	1040
			5	-	60	150	325	650	1200
			6	-	55	150	310	600	1100
			7	-	50	140	300	550	1100
			8	-	50	140		542	1050
			10	-	60	160	330	650	1200
			12	-	55	150	310	600	1100
			14	-	50	140	300	550	1100
			20	-	40	100	230	450	900
		2	15	-	55	130	208	342	588
			25	-	60	150	325	650	1200
			30	-	55	150	310	600	1100
			35	-	50	140	300	550	1100
			40	-	50	140	290	542	1050
			50	-	60	160	330	650	1200
			60	-	55	150	310	600	1100
			70	-	50	140	300	550	1100
			80	-	50	140	290	542	1050
			100	-	60	160	330	650	1200
			120	-	55	150	310	600	1100
			140	-	50	140	300	550	1100
			160	-	45	120	260	500	1000
			200	-	40	100	230	450	900
急停扭矩 /Emergency stop torque T_{2NOT}	Nm	1,2	3~200	三倍额定输出力矩 /Triple rated output torque					
额定输入转速/Rated input speed n_{1N}	rpm	1,2	3~200	5000	5000	4000	4000	3000	3000
最大输入转速 /Maximum iutput speed n_{1B}	rpm	1,2	3~200	10000	10000	8000	8000	6000	6000
标准背隙 /Standard backlash P2*	arcmin	1	3~20	-	≤10	≤10	≤10	≤10	≤10
		2	15~200	-	≤13	≤13	≤13	≤13	≤13
扭转刚性 /Torsional rigidity	Nm/arcmin	1,2	3~200	-	7	14	25	50	145
容许径向力/Allowable radial force F_{2aB}	N	1,2	3~200	780	1530	3250	6700	9400	14500
容许轴向力/Allowable axial force F_{2aB}	N	1,2	3~200	390	765	1625	3350	4700	7250
使用寿命 /Lifespan	hr	1,2	3~200	20000 *					
效率 /Efficiency	%	1	3~20	95%					
		2	25~200	92%					
重量 /Weight	kg	1	3~20	-	2.1	6.4	13	24.5	51
		2	25~200	-	1.5	7.8	14.2	27.5	54
使用温度 /Working temperature	℃	1,2	3~200	（-10° C +90° C）					
润滑 /Lubricating				合成润滑脂/Synthetic lubricating grease					
防护等级 /IP Grade		1,2	3~200	IP65					
安装方向/Installation direction		1,2	3~200	任意方向 /In any direction					
噪音值(n1=3000rpm,无负载) Noise level（n1=3000rpm,off load）	dB(A)	1,2	3~200	-	≤63	≤65	≤68	≤70	≤72

（带“*”的精度需与工程师确认/Need confirm with our engineer for those precision data with *）

● 减速机转动惯量 /Rotational inertia

规格 Specification	单位 Unit	节数 Stage	减速比 Ratio	WVRBR042	WVRBR060	WVRBR090	WVRBR115	WVRBR140	WVRBR180
转动惯量J1 Rotational inertia J1	kg.cm²	1	3~10	0.09	0.35	2.25	6.84	23.4	68.9
			12~14	0.035	0.07	1.87	6.25	21.8	65.6
			20	0.03	0.07	1.87	6.25	21.8	65.6
		2	15	0.09	0.35	2.25	6.84	23.4	68.9
			25~100	0.09	0.09	0.35	2.25	6.84	23.4
			120~200	0.007	0.01	0.31	1.87	6.25	21.8

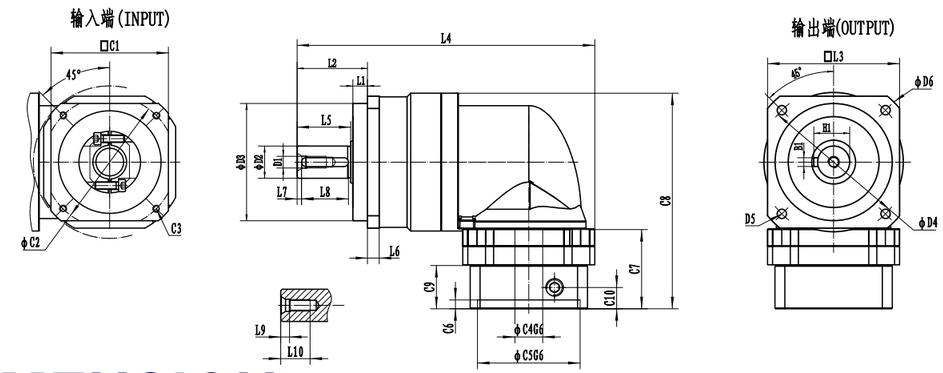

DIMENSION

DOUBLE SECTION

● 尺寸（单节，减速比 i=3～20）

Dimension(single stage,Ratio i=3~20)

尺寸/Dimension	WVRBR042	WVRBR060	WVRBR090	WVRBR115	WVRBR140	WVRBR180
D1	-	M5	M8	M12	M16	-
$D2_{j6}$	-	16	22	32	40	-
$D3_{g6}$	-	50	80	110	130	-
D4	-	70	100	130	165	-
D5	-	4× ϕ5.5	4× ϕ6.6	4× ϕ9	4× ϕ11	-
D6	-	80	116	152	185	-
L1	-	7	10	7	13	-
L2	-	37	48	60	95	-
L3	-	60	90	115	140	-
L4	-	149.5	203	266.5	359	-
L5	-	28.5	36.5	51	79	-
L6	-	6	8	10	12	-
L7	-	3	3	5	5	-
L8	-	25.3	32	40	63	-
L9	-	4	6	10	16	-
L10	-	13	20	28	36	-
C1	-	60	80	130	180	-
C2	-	70	90	145	200	-
C3	-	4×M4	4×M5	4×M8	4×M12	-
$C4_{G6}$	-	14	19	24	35	-
$C5_{G6}$	-	50	70	110	114.3	-
C6	-	3.5	6	14	19	-
C7	-	35	54	81	81	-
C8	-	104.5	147	194.5	250.5	-
C9	-	24.2	29.5	45	57	-
C10	-	9.5	14.5	27	32	-
B1	-	5	6	10	12	-
H1	-	18	24.5	35	43	-

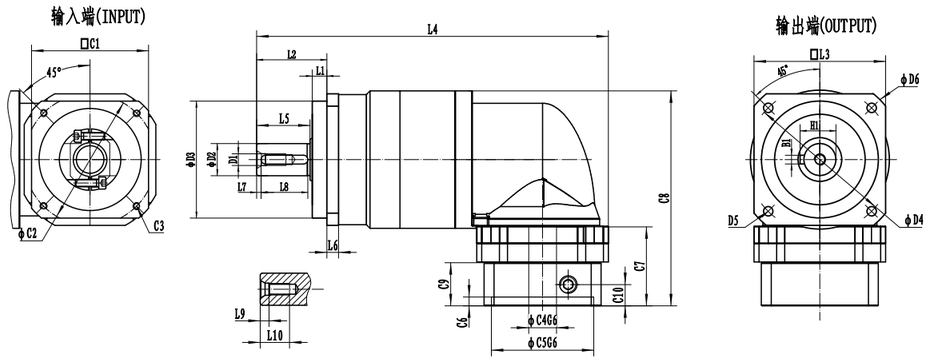

DIMENSION

DOUBLE SECTION

- 尺寸（双节，减速比 i=15～200）

Dimension(double stage,Ratio i=15~200)

尺寸/Dimension	WVRBR042	WVRBR060	WVRBR090	WVRBR115	WVRBR140	WVRBR180
D1	-	M5	M8	M12	M16	-
D2	-	16	22	32	40	-
D3	-	50	80	110	130	-
D4	-	70	100	130	165	-
D5	-	4× ϕ5.5	4× ϕ6.6	4× ϕ9	4× ϕ11	-
D6	-	80	116	152	185	-
L1	-	7	10	7	13	-
L2	-	37	48	60	95	-
L3	-	60	90	115	140	-
L4	-	181.5	240.5	290	431	-
L5	-	28.5	36.5	51	79	-
L6	-	6	8	10	12	-
L7	-	3	3	5	5	-
L8	-	25.3	32	40	63	-
L9	-	4	6	10	16	-
L10	-	13	20	28	36	-
C1	-	60	80	130	180	-
C2	-	70	90	145	200	-
C3	-	4×M4	4×M5	4×M8	4×M12	-
$C4_{G6}$	-	14	19	24	35	-
$C5_{G6}$	-	50	70	110	114.3	-
C6	-	3.5	6	11.5	19	-
C7	-	35	54	67	81	-
C8	-	104.5	147	175.5	250.5	-
C9	-	24.2	29.5	42.5	57	-
C10	-	9.5	14.5	27	32	-
B1	-	5	6	10	12	-
H1	-	18	24.5	35	43	-

WAER

Series planetary gearbox

系列行星减速机

FEATURES

产品特点

- 行星臂架与输出轴采用一体式结构设计， 确保最大的扭转刚性。
- 行星轮采用满滚针设计，增加接触面积以提高结构刚性与输出扭矩。
- 齿轮采用低碳钢表面渗碳淬火到HRC62，以获得最佳的耐磨及冲击韧性。
- 齿形引用国外进口软件辅助设计，以获得最佳的齿形降低噪音。
- 输入端与马达轴连接采用双边抱紧方式，以获取最大的夹紧力和零背隙的动力传递。
- 采用蜗线伞齿轮设计，容许输出扭矩高、比直伞齿轮高30%以上。
- 高容许输入转速，比直伞齿轮输入高8倍以上。
- 蜗线伞齿轮的啮合齿印，经最佳优化设计，接触齿面负载均一，运转寿命长。
- 蜗线伞齿轮啮合，经最佳运动误差分析与严格的制程控制，以确保高精度的运转背隙。

- Planetary boom and output shaft are intergrated structure designed to ensure maximum torsional rigidity.
- Planetary wheel with full needle design,increase the contact area to improve the rigidity and output torque.
- The gears are carburized and quenched to the HRC62 with low carbon steel surface for optimum wear and impact toughness.
- Gears refer to foreign imported software-assisted design to obtain the best tooth shape to reduce noise.
- The input terminal is connected to the motor shaft in a double-tight manner to obtain the maximum clamping force and zero backlash power transmission.
- Adopt spiral bevel gear design, allow high output torque, more than 30% higher than straight bevel gear.
- High tolerance input speed, more than 8 times higher than straight bevel gear input.
- The meshing tooth imprint of spiral bevel gear has been optimized by optimum design, and the contact tooth surface load is uniform, and long running life.
- Cochlear bevel gears are meshed by optimum motion error analysis and strict process control to ensure high precision running back clearance.

INDICATION FOR MODEL

SELECTION

● 机种型号表示

W – AER – 090 – 010 – K – P2 – 马达型号 Motor reference

品牌 Brand: W

系列 Model: ADR, VRBR, ABR, AER

规格 Size: 050, 070, 090, 120, 155, 205

减速比 Ratio: 3, 4, 5, 6, 7, 8, 10, 12, 14, 15, 20, 25 ····· 200

K-键 K-Key; S-光轴 S-Smooth

精度 Precision: P1 精密背隙 Precision backlash; P2 标准背隙 Standard backlash

GENERAL NOTICES

● 订货须知

- 机种、型号、扭矩
- 减速比或出力轴转速
- 工况及连接方式
- 数量及安装的机械名称
- 入力方式和入力转速
- 马达厂牌型号或法兰及马达轴尺寸

- Type, model and torque
- Ratio or output speed
- Working conditions and connection methods
- Quantity and installed machine name
- Input mode and input speed
- Motor brand model or flange and motor shaft size

● 减速机性能资料/Performance

规格 Specification	单位 Unit	节数 Stage	减速比 Ratio	WAER050	WAER070	WAER090	WAER120	WAER155	WAER205
额定输出力矩 Rated output torque T_{2N}	Nm	1	3	-	36	90	195	342	588
			4	-	48	120	260	520	1040
			5	-	60	150	325	650	1200
			6	-	55	150	310	600	1100
			7	-	50	140	300	550	1100
			8	-	50	140	290	542	1050
			10	-	60	160	330	650	1200
			12	-	55	150	310	600	1100
			14	-	50	140	300	550	1100
			20	-	40	100	230	450	900
		2	15	-	55	130	208	342	588
			25	-	60	150	325	650	1200
			30	-	55	150	310	600	1100
			35	-	50	140	300	550	1100
			40	-	50	140	290	542	1050
			50	-	60	160	330	650	1200
			60	-	55	150	310	600	1100
			70	-	50	140	300	550	1100
			80	-	50	140	290	542	1050
			100	-	60	160	330	650	1200
			120	-	55	150	310	600	1100
			140	-	50	140	300	550	1100
			160	-	45	120	260	500	1000
			200	-	40	100	230	450	900
急停扭矩 /Emergency stop torque T_{2NOT}	Nm	1,2	3~200	三倍额定输出力矩 /Triple rated output torque					
额定输入转速/Rated input speed n_{1N}	rpm	1,2	3~200	5000	5000	4000	4000	3000	3000
最大输入转速 /Maximum iutput speed n_{1B}	rpm	1,2	3~200	10000	10000	8000	8000	6000	6000
精密背隙 /Precision backlash P1*	arcmin	1	3~20	-	≤8	≤8	≤8	≤8	≤8
		2	15~200	-	≤10	≤10	≤10	≤10	≤10
标准背隙 /Standard backlash P2*	arcmin	1	3~20	-	≤10	≤10	≤10	≤10	≤10
		2	15~200	-	≤13	≤13	≤13	≤13	≤13
扭转刚性 /Torsional rigidity	Nm/arcmin	1,2	3~200	-	7	14	25	50	145
容许径向力/Allowable radial force F_{2aB}	N	1,2	3~200	780	1530	3250	6700	9400	14500
容许轴向力/Allowable axial force F_{2aB}	N	1,2	3~200	390	765	1625	3350	4700	7250
使用寿命 /Lifespan	hr	1,2	3~200	20000 *					
效率 /Efficiency	%	1	3~20	95%					
		2	25~200	92%					
重量 /Weight	kg	1	3~20	-	2.1	6.4	13	24.5	51
		2	25~200	-	1.5	7.8	14.2	27.5	54
使用温度 /Working temperature	°C	1,2	3~200	（-10° C +90° C）					
润滑 /Lubricating				合成润滑脂/Synthetic lubricating grease					
防护等级 /IP Grade		1,2	3~200	IP65					
安装方向 /Installation direction		1,2	3~200	任意方向 /In any direction					
噪音值（n1=3000, 无负载） Noise level（n1=3000, off load）	dB(A)	1,2	3~200	-	≤63	≤65	≤68	≤70	≤72

（带"*"的精度需与工程师确认/Need confirm with our engineer for those precision data with *）

● 减速机转动惯量 /Rotational inertia

规格 Specification	单位 Unit	节数 Stage	减速比 Ratio	WAER050	WAER070	WAER090	WAER120	WAER155	WAER205
转动惯量J1 Rotational inertia J1	kg.cm²	1	3~10	0.09	0.35	2.25	6.84	23.4	68.9
			12、14	0.035	0.07	1.87	6.25	21.8	65.6
			20	0.03	0.07	1.87	6.25	21.8	65.6
		2	15	0.09	0.35	2.25	6.84	23.4	68.9
			25~100	0.09	0.09	0.35	2.25	6.84	23.4
			120~200	0.007	0.01	0.31	1.87	6.25	21.8

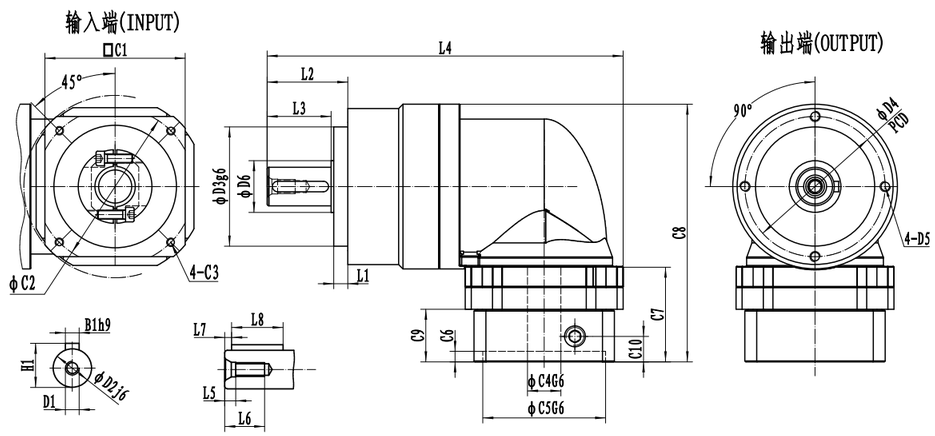

DIMENSION

SINGLE SECTION

- 尺寸（单节，减速比 i=3～20）

Dimension(single stage,Ratio i=3~200)

尺寸/Dimension	WAER050	WAER070	WAER090	WAER120	WAER155	WAER205
D1	-	M5	M8	M12	M16	-
$D2_{j6}$	-	16	22	32	40	-
$D3_{g6}$	-	52	68	90	120	-
D4	-	62	80	108	140	-
D5	-	M5	M6	M8	M10	-
D6	-	17.5	29.5	39.5	49.5	-
L1	-	6.5	8	17	15	-
L2	-	36	46	70	97	-
L3	-	28.5	36.5	51	79	-
L4	-	149.5	203	266.5	359	-
L5	-	4	6	10	16	-
L6	-	13	20	28	36	-
L7	-	3	3	5	5	-
L8	-	25.3	32	40	63	-
C1	-	60	80	130	180	-
C2	-	70	90	145	200	-
C3	-	M4	M5	M8	M12	-
$C4_{G6}$	-	14	19	24	35	-
$C5_{G6}$	-	50	70	110	114.3	-
C6	-	3.5	6	14	19	-
C7	-	35	54	81	81	-
C8	-	105	147	194.5	253	-
C9	-	24.2	29.5	45	57	-
C10	-	9.5	14.5	27	32	-
B1	-	5	6	10	12	-
H1	-	18	24.5	35	43	-

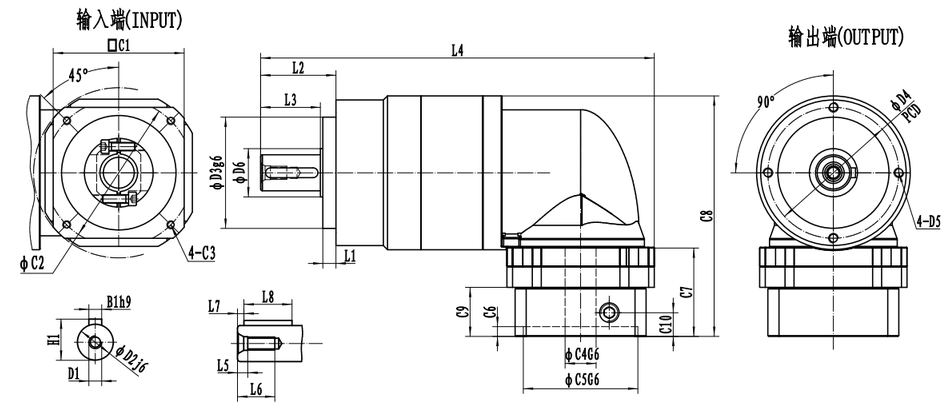

DIMENSION

DOUBLE SECTION

- 尺寸（双节，减速比 i=15～200）

Dimension(double stage,Ratio i=15~200)

尺寸/Dimension	WAER050	WAER070	WAER090	WAER120	WAER155	WAER205
D1	-	M5	M8	M12	M16	-
D2	-	16	22	32	40	-
D3	-	52	68	90	120	-
D4	-	62	80	108	140	-
D5	-	M5	M6	M8	M10	-
D6	-	17.5	29.5	39.5	49.5	-
L1	-	6.5	8	17	15	-
L2	-	36	46	70	97	-
L3	-	28.5	36.5	51	79	-
L4	-	181.5	240.5	290	431	-
L5	-	4	6	10	16	-
L6	-	13	20	18	36	-
L7	-	3	3	5	5	-
L8	-	25.3	32	40	63	-
C1	-	60	80	130	180	-
C2	-	70	90	145	200	-
C3	-	M4	M5	M8	M12	-
$C4_{G6}$	-	14	19	24	35	-
$C5_{G6}$	-	50	70	110	114.3	-
C6	-	3.5	6	11.5	19	-
C7	-	35	54	67	81	-
C8	-	105	147	178	253	-
C9	-	24.2	29.5	42.5	57	-
C10	-	9.5	14.5	27	32	-
B1	-	5	6	10	12	-
H1	-	18	24.5	35	43	-

WPFR Series Planetary Gearbox
系列行星减速机

FEATURES
产品特点

- 行星臂架与输出轴采用一体式结构设计， 确保最大的扭转刚性。
- 行星轮采用满滚针设计，增加接触面积以提高结构刚性与输出扭矩。
- 齿轮采用低碳钢表面渗碳淬火到HRC62，以获得最佳的耐磨及冲击韧性。
- 齿形引用国外进口软件辅助设计，以获得最佳的齿形降低噪音。
- 输入端与马达轴连接采用双边抱紧方式，以获取最大的夹紧力和零背隙的动力传递。
- 采用蜗线伞齿轮设计，容许输出扭矩高、比直伞齿轮高30%以上。
- 高容许输入转速，比直伞齿轮输入高8倍以上。
- 蜗线伞齿轮的啮合齿印，经最佳优化设计，接触齿面负载均一，运转寿命长。
- 蜗线伞齿轮啮合，经最佳运动误差分析与严格的制程控制，以确保高精度的运转背隙。

- Planetary boom and output shaft are intergrated structure designed to ensure maximum torsional rigidity.
- Planetary wheel with full needle design,increase the contact area to improve the rigidity and output torque.
- The gears are carburized and quenched to the HRC62 with low carbon steel surface for optimum wear and impact toughness.
- Gears refer to foreign imported software-assisted design to obtain the best tooth shape to reduce noise.
- The input terminal is connected to the motor shaft in a double-tight manner to obtain the maximum clamping force and zero backlash power transmission.
- Adopt spiral bevel gear design, allow high output torque, more than 30% higher than straight bevel gear.
- High tolerance input speed, more than 8 times higher than straight bevel gear input.
- The meshing tooth imprint of spiral bevel gear has been optimized by optimum design, and the contact tooth surface load is uniform, and long running life.
- Cochlear bevel gears are meshed by optimum motion error analysis and strict process control to ensure high precision running back clearance.

INDICATION FOR MODEL SELECTION
机种型号表示

W — PFR — 090 — 010 — K — P2 — 马达型号 Motor reference

- W: 品牌 Brand
- PFR: 系列 Model — PFR, PLR
- 090: 规格 Size — 042, 060, 080, 115, 142
- 010: 减速比 Ratio — 3, 4, 5, 6, 7, 8, 10, 15, 20, 25, 35, 40, 50, 60, 70, 80, 100, ……, 200
- K: K-键 K-Key; S-光轴 S-Smooth
- P2: 精度 Precision — P2标准背隙 Standard backlash

GENERAL NOTICES
订货须知

- 机种、型号、扭矩
- 减速比或出力轴转速
- 工况及连接方式
- 数量及安装的机械名称
- 入力方式和入力转速
- 马达厂牌型号或法兰及马达轴尺寸

- Type, model and torque
- Ratio or output speed
- Working conditions and connection methods
- Quantity and installed machine name
- Input mode and input speed
- Motor brand model or flange and motor shaft size

PLANETARY GEARBOX

减速机性能资料/Performance

规格 Specification	单位 Unit	节数 Stage	减速比 Ratio	WPFR042	WPFR060	WPFR080	WPFR115	WPFR142
额定输出力矩 Rated output torque T_{2N}	Nm	1	3	8	18	40	125	290
			4	12	36	90	230	460
			5	16	40	110	260	550
			6	8	20	40	90	340
			7	8	20	40	90	340
			8	5	36	90	230	460
			10	5	40	110	260	550
			12	8	20	40	90	340
			14	–	20	40	90	340
			20		12	22	70	210
		2	15	16	40	110	260	550
			25	16	40	110	260	550
			30	16	18	40	125	290
			35	16	40	110	260	550
			40	–	36	90	230	460
			50	–	40	110	260	550
			60	–	20	40	90	340
			70	–	20	40	90	340
			80	–	36	90	230	460
			100	–	40	110	260	550
			140	–	20	40	90	340
			200	–	12	22	70	210
急停扭矩 /Emergency stop torque T_{2NOT}	Nm	1,2	3~200	二倍额定输出力矩 /Double rated output torque				
额定输入转速/Rated input speed n_{1N}	rpm	1,2	3~200	4500	4000	3500	3500	3000
最大输入转速 /Maximum iutput speed n_{1B}	rpm	1,2	3~200	10000	8000	6000	6000	4500
标准背隙 /Standard backlash P2	arcmin	1	3~20	≤26	≤16	≤16	≤16	≤16
		2	15~200	≤28	≤18	≤18	≤18	≤18
扭转刚性 /Torsional rigidity	Nm/arcmin	1,2	3~200	0.65	1.8	4.7	11	35
容许径向力/Allowable radial force F_{2aB}	N	1,2	3~200	165	240	400	1240	3700
容许轴向力/Allowable axial force F_{2aB}	N	1,2	3~200	135	220	420	1000	3500
使用寿命 /Lifespan	hr	1,2	3~200	10000*				
效率 /Efficiency	%	1	3~20	94%				
		2	25~200	91%				
重量 /Weight	kg	1	3~20	0.3	0.85	2	6	11
		2	25~200	0.4	0.9	2.3	7.5	13
使用温度 /Working temperature	℃	1,2	3~200	（–10° C +90° C）				
润滑 /Lubricating				合成润滑脂/Synthetic lubricating grease				
防护等级 /IP Grade		1,2	3~200	IP54				
安装方向 /Installation direction		1,2	3~200	任意方向 /In any direction				
噪音值(n1=3000, 无负载) Noise level（n1=3000, off load）	dB(A)	1,2	3~200	≤65	≤65	≤68	≤73	≤75

减速机转动惯量/Rotational inertia

规格 Specification	单位 Unit	节数 Stage	减速比 Ratio	WPFR042	WPFR060	WPFR080	WPFR115	WPFR142
转动惯量J1 Rotational inertia J1	kg.cm²	1	3~10	0.03	0.135	0.75	2.5	5.8
			12、14	0.03	0.09	0.45	1.3	1.9
			20	0.03	0.09	0.39	1.2	2.73
		2	15	0.015	0.09	0.45	2.4	3.3
			25~100	0.01	0.035	0.2	1.4	2.3
			120~200	0.005	0.035	0.18	1.3	2.1

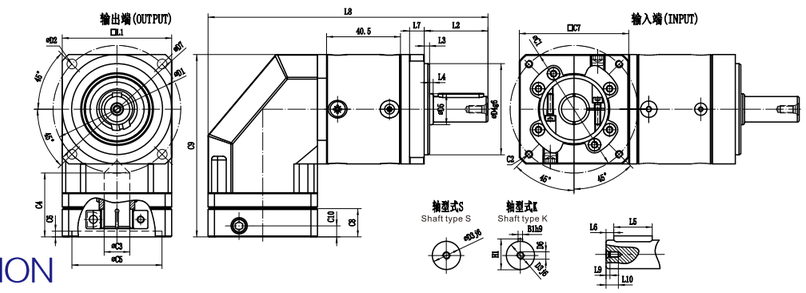

DIMENSION
SINGLE SECTION

尺寸（单节，减速比i=3～20）Dimension(single stage,Ratio i=3~20)

尺寸/Dimension	WPFR042	WPFR060	WPFR080	WPFR115	WPFR142
D1	–	70	100	130	185
D2	–	5.5	6.5	8.8	11
D3	–	14	20	25	40
D4	–	50	80	110	130
D5	–	17	25	35	55
D6	–	M5	M6	M10	M12
D7	–	80	120	160	230
L1	–	60	90	120	176
L2	–	35	40	55	87
L3	–	3	3	4	5
L4	–	2	1	1	2
L5	–	25	25	40	65
L6	–	2.5	5	5	5
L7	–	8	10	14	15
L8	–	153.5	204	288	340.5
L9	–	4.8	5	7.5	9.5
L10	–	12	18	23	25
C1	–	70	90	145	200
C2	–	M4	M5	M8	M12
C3	–	6–14	14–19	16–24	22–35
C4	–	35	54	81	81
C5	–	50	70	110	114.3
C6	–	3.5	6	14	19
C7	–	60	80	130	180
C8	–	16	30	45.5	57.5
C9	–	100	137	192	246.5
C10	–	9.5	14.5	27	32
B1h9	–	5	6	8	12
H1	–	16	22.5	28	43

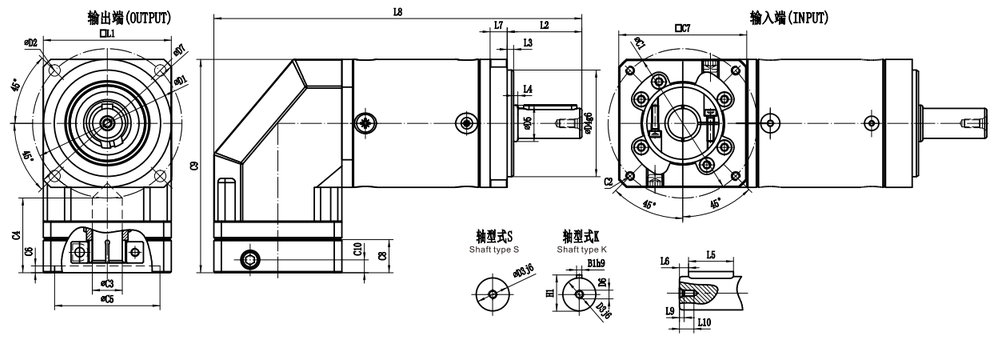

DIMENSION

DOUBLE SECTION

- 尺寸（双节，减速比 i=15～200）

Dimension(double stage,Ratio i=15~200)

尺寸/Dimension	WPFR042	WPFR060	WPFR080	WPFR115	WPFR142
D1	–	70	100	130	185
D2	–	5.5	6.5	8.8	11
D3	–	14	20	25	32
D4	–	50	80	110	130
D5	–	17	25	35	40
D6	–	M5	M6	M10	M12
D7	–	80	120	160	230
L1	–	60	90	120	176
L2	–	35	40	55	87
L3	–	3	3	4	5
L4	–	2	1	1	2
L5	–	25	25	40	65
L6	–	2.5	4	5	5
L7	–	8	10	14	15
L8	–	172.5	228.5	288	388.5
L9	–	4.8	5	7.5	9.5
L10	–	12	18	23	25
C1	–	70	90	145	200
C2	–	M4	M5	M8	M12
C3	–	6–14	14–19	16–24	22–35
C4	–	35	54	81	81
C5	–	50	70	110	114.3
C6	–	3.5	6	14	19
C7	–	60	80	130	180
C8	–	16	30	45.5	57.5
C9	–	100	137	192	246.5
C10	–	9.5	14.5	27	32
B1h9	–	5	6	8	12
H1	–	16	22.5	28	43

WPLR

Series Planetary Gearbox

系列行星减速机

FEATURES

产品特点

- 行星臂架与输出轴采用一体式结构设计， 确保最大的扭转刚性。
- 行星轮采用满滚针设计，增加接触面积以提高结构刚性与输出扭矩。
- 齿轮采用低碳钢表面渗碳淬火到HRC62，以获得最佳的耐磨及冲击韧性。
- 齿形引用国外进口软件辅助设计，以获得最佳的齿形降低噪音。
- 输入端与马达轴连接采用双边抱紧方式，以获取最大的夹紧力和零背隙的动力传递。
- 采用蜗线伞齿轮设计，容许输出扭矩高、比直伞齿轮高30%以上。
- 高容许输入转速，比直伞齿轮输入高8倍以上。
- 蜗线伞齿轮的啮合齿印，经最佳优化设计，接触齿面负载均一，运转寿命长。
- 蜗线伞齿轮啮合，经最佳运动误差分析与严格的制程控制，以确保高精度的运转背隙。

- Planetary boom and output shaft are intergrated structure designed to ensure maximum torsional rigidity.
- Planetary wheel with full needle design,increase the contact area to improve the rigidity and output torque.
- The gears are carburized and quenched to the HRC62 with low carbon steel surface for optimum wear and impact toughness.
- Gears refer to foreign imported software-assisted design to obtain the best tooth shape to reduce noise.
- The input terminal is connected to the motor shaft in a double-tight manner to obtain the maximum clamping force and zero backlash power transmission.
- Adopt spiral bevel gear design, allow high output torque, more than 30% higher than straight bevel gear.
- High tolerance input speed, more than 8 times higher than straight bevel gear input.
- The meshing tooth imprint of spiral bevel gear has been optimized by optimum design, and the contact tooth surface load is uniform, and long running life.
- Cochlear bevel gears are meshed by optimum motion error analysis and strict process control to ensure high precision running back clearance.

INDICATION FOR MODEL

SELECTION

● 机种型号表示

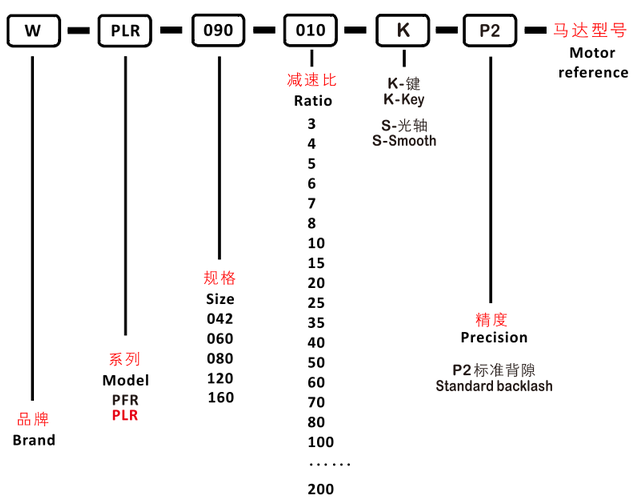

GENERAL NOTICES

● 订货须知

- 机种、型号、扭矩
- 减速比或出力轴转速
- 工况及连接方式
- 数量及安装的机械名称
- 入力方式和入力转速
- 马达厂牌型号或法兰及马达轴尺寸

- Type, model and torque
- Ratio or output speed
- Working conditions and connection methods
- Quantity and installed machine name
- Input mode and input speed
- Motor brand model or flange and motor shaft size

PLANETARY GEARBOX

● 减速机性能资料/Performance

规格 Specification	单位 Unit	节数 Stage	减速比 Ratio	WPLR042	WPLR060	WPLR080	WPLR120	WPLR160
额定输出力矩 Rated output torque T_{2N}	Nm	1	3	8	18	40	125	290
			4	12	36	90	230	460
			5	16	40	110	260	550
			6	8	20	40	90	340
			7	8	20	40	90	340
			8	5	36	90	230	460
			10	5	40	110	260	550
			12	8	20	40	90	340
			14	8	20	40	90	340
			20	12	12	22	70	210
		2	15	16	40	110	260	550
			25	16	40	110	260	550
			30	16	18	40	125	290
			35	16	40	110	260	550
			40	–	36	90	230	460
			50	–	40	110	260	550
			60	–	20	40	90	340
			70	–	20	40	90	340
			80	–	36	90	230	460
			100	–	40	110	260	550
			140	–	20	40	90	340
			200	–	12	22	70	210
急停扭矩 /Emergency stop torque T_{2NOT}	Nm	1,2	3~200	二倍额定输出力矩 /Double rated output torque				
额定输入转速/Rated input speed n_{1N}	rpm	1,2	3~200	4500	4000	3500	3500	3000
最大输入转速 /Maximum iutput speed n_{1B}	rpm	1,2	3~200	10000	8000	6000	6000	4500
标准背隙 /Standard backlash P2	arcmin	1	3~20	≤26	≤16	≤16	≤16	≤16
		2	15~200	≤28	≤18	≤18	≤18	≤18
扭转刚性 /Torsional rigidity	Nm/arcmin	1,2	3~200	0.65	1.8	4.7	11	35
容许径向力/Allowable radial force F_{2aB}	N	1,2	3~200	165	240	400	1240	3700
容许轴向力/Allowable axial force F_{2aB}	N	1,2	3~200	135	220	420	1000	3500
使用寿命 /Lifespan	hr	1,2	3~200	10000 *				
效率 /Efficiency	%	1	3~20	94%				
		2	25~200	91%				
重量 /Weight	kg	1	3~20	0.3	0.85	2	6	11
		2	25~200	0.4	0.9	2.3	7.5	13
使用温度 /Working temperature	℃	1,2	3~200	（-10° C +90° C）				
润滑 /Lubricating				合成润滑脂/Synthetic lubricating grease				
防护等级 /IP Grade		1,2	3~200	IP54				
安装方向 /Installation direction		1,2	3~200	任意方向 /In any direction				
噪音值（n1=3000，无负载） Noise level（n1=3000, off load）	dB(A)	1,2	3~200	≤65	≤65	≤68	≤73	≤75

- 减速机转动惯量 /Rotational inertia

规格 Specification	单位 Unit	节数 Stage	减速比 Ratio	WPLR042	WPLR060	WPLR080	WPLR120	WPLR160
转动惯量J1 Rotational inertia J1	kg.cm²	1	3~10	0.03	0.135	0.75	2.5	5.8
			12、14	0.03	0.09	0.45	1.3	1.9
			20	0.03	0.09	0.39	1.2	2.73
		2	15	0.015	0.09	0.45	2.4	3.3
			25~100	0.01	0.035	0.2	1.4	2.3
			120~200	0.005	0.035	0.18	1.3	2.1

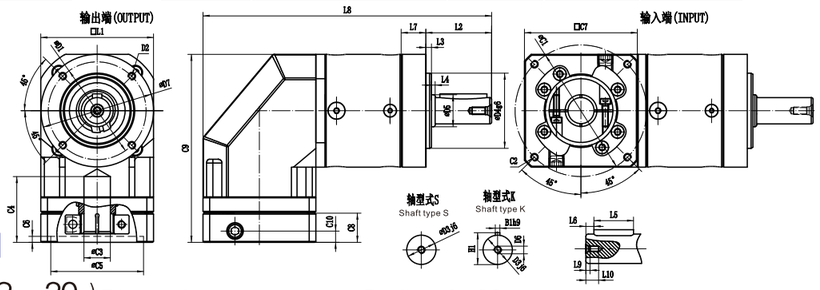

DIMENSION
SINGLE SECTION

- 尺寸（单节，减速比i=3～20）Dimension(single stage,Ratio i=3~20)

尺寸/Dimension	WPLR042	WPLR060	WPLR080	WPLR120	WPLR160
D1	–	52	70	100	145
D2	–	M5	M6	M10	M12
D3	–	14	20	25	40
D4	–	40	60	80	130
D5	–	17	25	35	55
D6	–	M5	M6	M10	M12
D7	–	60	80	115	162
L1	–	60	80	115	142
L2	–	35	40	55	87
L3	–	3	3	4	5
L4	–	2	1	1	2
L5	–	25	25	40	65
L6	–	2.5	5	5	5
L7	–	13	21.5	40.5	32.5
L8	–	153.5	204	288	340.5
L9	–	4.8	5	7.5	9.5
L10	–	12	18	23	25
C1	–	70	90	145	200
C2	–	M4	M5	M8	M12
C3	–	6–14	14–19	16–24	22–35
C4	–	35	54	81	81
C5	–	50	70	110	114.3
C6	–	3.5	6	14	19
C7	–	60	80	130	180
C8	–	16	30	45.5	57.5
C9	–	100	137	192	246.5
C10	–	9.5	14.5	27	32
B1h9	–	5	6	8	12
H1	–	16	22.5	28	43

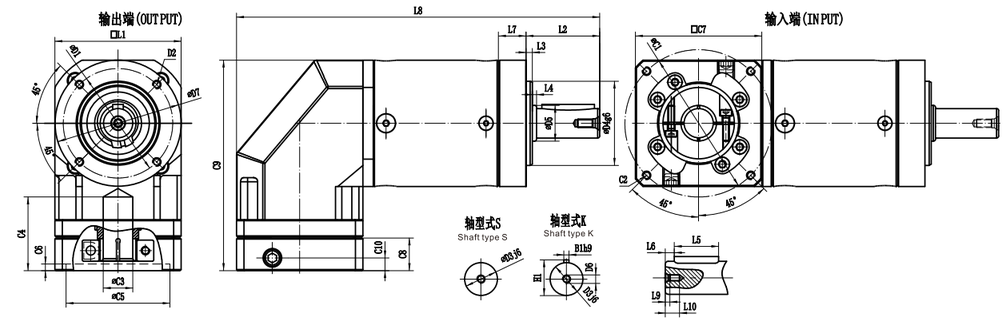

DIMENSION
DOUBLE SECTION

- 尺寸（双节，减速比 i=15～200）Dimension(double stage,Ratio i=15~200)

尺寸/Dimension	WPLR042	WPLR060	WPLR080	WPLR120	WPLR160
D1	–	52	70	100	145
D2	–	M5	M6	M10	M12
D3	–	14	20	25	40
D4	–	40	60	80	130
D5	–	17	25	35	55
D6	–	M5	M6	M10	M12
D7	–	60	80	115	162
L1	–	60	80	115	142
L2	–	35	40	55	87
L3	–	3	3	4	5
L4	–	2	1	1	2
L5	–	25	25	40	65
L6	–	2.5	5	5	5
L7	–	13	21.5	40.5	32.5
L8	–	172.5	228.5	288	388.5
L9	–	4.8	5	7.5	9.5
L10	–	12	18	23	25
C1	–	70	90	145	200
C2	–	M4	M5	M8	M12
C3	–	6–14	14–19	16–24	22–35
C4	–	35	54	81	81
C5	–	50	70	110	114.3
C6	–	3.5	6	14	19
C7	–	60	80	130	180
C8	–	16	30	45.5	57.5
C9	–	100	137	192	246.5
C10	–	9.5	14.5	27	32
B1h9	–	5	6	8	12
H1	–	16	22.5	28	43

WR Series Right-ANGLE Gearbox
系列转角减速机

FEATURES
产品特点

- WR系列采用蜗线伞型齿轮设计。
- 背隙可根据客户要求调整。
- 低噪音等特性。
- 精巧的外壳设计可搭配任何方向定位。
- 安装容易，能配合多种马达或加装减速机。
- 多样式输出（空心输出、实心输出、双向输出）。
- 全密封结构、免维护。

- WR series adopts worm bevel gear design.
- The backlash can be adjusted according to customer's requirement.
- Low noise
- The delicate shell design can be matched with any direction.
- Easy installation, can match with variety kinds of motor or gearbox.
- Multiple output(hollow output,solid output or dial output).
- Fully sealed structure, maintance-free

INDICATION FOR MODEL
SELECTION
- 机种型号表示

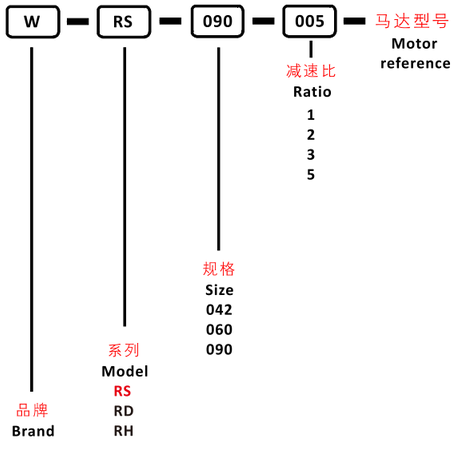

GENERAL NOTICES
- 订货须知

- 机种、型号、扭矩
- 减速比或出力轴转速
- 工况及连接方式
- 数量及安装的机械名称
- 入力方式和入力转速
- 马达厂牌型号或法兰及马达轴尺寸

- Type, model and torque
- Ratio or output speed
- Working conditions and connection methods
- Quantity and installed machine name
- Input mode and input speed
- Motor brand model or flange and motor shaft size

PERFORMANCE DATA OF

SPEED REDUCER

减速机性能资料 /Performance

减速机型号/Model	WRS/WRH/WRD042		WRS/WRH/WRD060				WRS/WRH/WRD090			
外框尺寸/Frame size	□42		□60				□90			
减速比/Reduction ratio	2	3	1	2	3	5	1	2	3	5
额定输出扭矩/Rated output torque	12	10	20	18	15	12	52	45	36	26
最大输出扭矩/Maximum output torque	2倍额定输出扭矩 /2 times rated output torque									
额定输入转速/ Rated input speed	1500rpm		1000rpm							
最大输入转速/Maximum input speed										
背隙/Backlash	背隙可调 /Adjustable backlash									
容许径向负载/Allowable radial load	300N		500N				1200N			
容许轴向负载/Allowable axial load	150N		200N				500N.			
输入轴径/Input shaft size	≤11 / ≤12（mm）		14 / ≤16（mm）				≤19 / ≤24（mm）			
转动惯量/Rotational Inertia	0.02kg・[cm]^2		0.06kg・[cm]^2				0.4kg・[cm]^2			
扭转刚性/Torsional rigidity	1.2Nm/arc min		1.5Nm/arc min				5Nm/arc min			
额定寿命/Rated lifespan	10000h（额定负载及额定输入转速条件下/Condition under rated load and rated input speed）									
效率/Efficiency	95%									
工作温度/Working Temperature	-10℃～80℃									
旋转方向/Rotation direction	与输入轴相反 /Opposite with the input shaft									
防护等级/Protection Level	IP65									
润滑方式/Lubricating method	脂润滑 /Grease Lubrication									
安装方向/Installation direction	任意方向 /In any direction									
噪音/Noise Level	≤65dB(A)		≤68dB(A)				≤69dB(A)			
重量/Weight	0.7Kg		1.3Kg				4.1Kg			

WRD

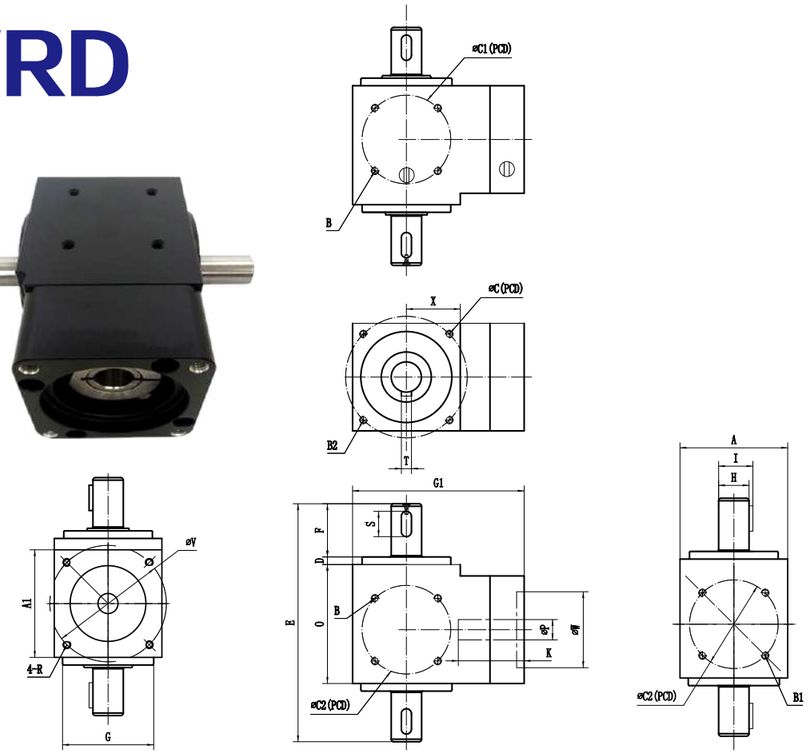

尺寸/Size	WRD04202/03	WRD06001/02/03/05	WRD09001/02/03/05
A	42.5	60	90
A1	42.5	60	90
B	4-M3深/Depth4	4-M4深/Depth5	4-M5深/Depth8
B1	4-M3深/Depth4	4-M4深/Depth5	4-M5深/Depth8
B2	4-M3深/Depth6	4-M5深/Depth10	4-M6深/Depth12
C	48	70	100
C1	42	46	70
C2	35	36	60
D	3	3	3
E	94	125	170
F	21	27	35
G	36	52	80
G1	68	98	129
H	12	14	19
I	13.5	16	21.8
K	26	34	41
O	47	64	93.5
S	10	16	25
T	4	5	6
X	21.25	30	45

WRS

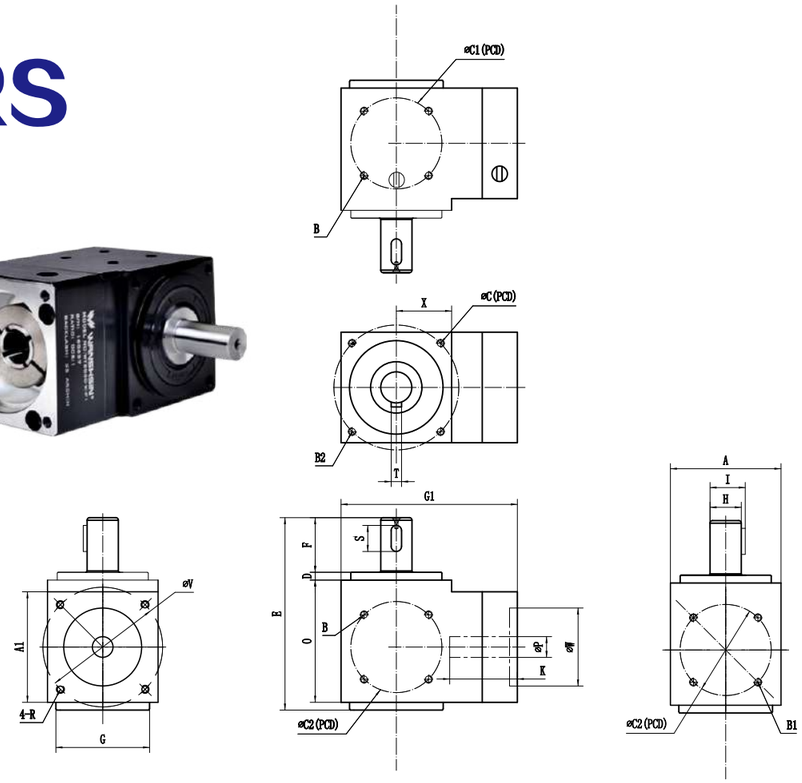

尺寸/Size	WRS04202/03	WRS06001/02/03/05	WRS09001/02/03/05
A	42.5	60	90
A1	42.5	60	90
B	4-M3深/Depth4	4-M4深/Depth5	4-M5深/Depth8
B1	4-M3深/Depth4	4-M4深/Depth5	4-M5深/Depth8
B2	4-M3深/Depth6	4-M5深/Depth10	4-M6深/Depth12
C	48	70	100
C1	42	46	70
C2	35	36	60
D	3	3	3
E	74	97	136.5
F	21	27	35
G	36	52	80
G1	68	98	129
H	12	14	19
I	13.5	16	21.8
K	26	34	41
O	47	64	93.5
S	10	16	25
T	4	5	6
X	21.25	30	45

WRH

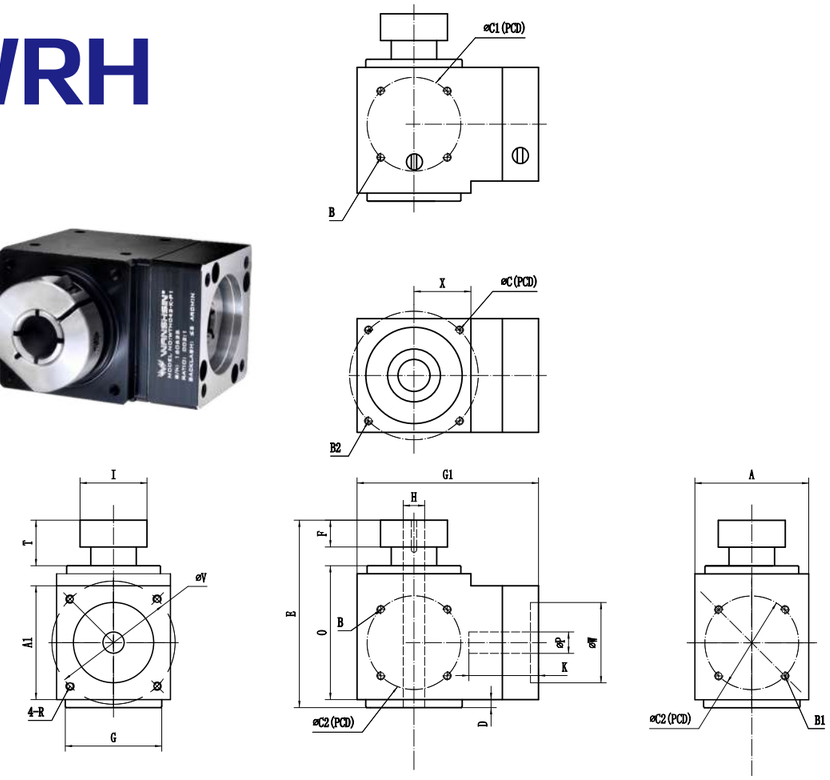

尺寸/Size	WRH04202/03	WRH06001/02/03/05	WRH09001/02/03/05
A	42.5	60	90
A1	42.5	60	90
B	4-M3深/Depth4	4-M4深/Depth5	4-M5深/Depth8
B1	4-M3深/Depth4	4-M4深/Depth5	4-M5深/Depth8
B2	4-M3深/Depth6	4-M5深/Depth10	4-M6深/Depth12
C	48	70	100
C1	42	46	70
C2	35	36	60
D	3	3	3
E	65.5	88	125
F	8	10	16
G	36	52	80
G1	68	98	129
H	8	14	20
I	25	34	54
K	26	34	50
O	47	64	93.5
T	12.5	18	25
X	21.25	30	45

中空旋转平台 Hollow Rotary Platform

FEATURES
产品特点

- 旋转面可直接连接工作零件，提升安装的方便性。
  The rotary surface can be connected with parts directly which is more convenient for installation.
- 高精度，重复定位精度可达±15arcsec。
  High precision,repeated positioning accuracy can reach to 15 arcsec
- 中空式的设计，配线配管都方便使用。
  Hollow design,very convenient for go through the line
- 可搭载各种厂家的伺服和步进电机。
  Can be equipped with various brands of servo and step motor
- 大口径中空旋转平台中空径最大Φ150mm。
  The maximum diameter of the large hollow Rotary Platform is 150mm

INDICATION FOR MODEL
SELECTION
- 机种型号表示

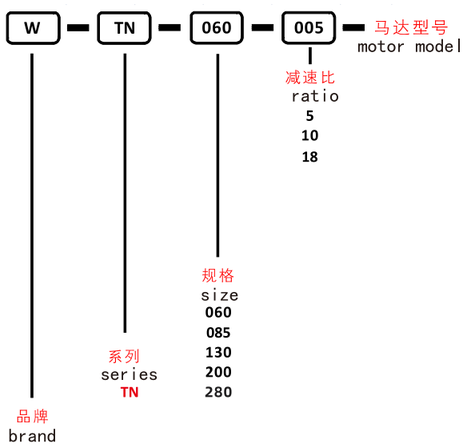

GENERAL NOTICES
- 订货须知

- 机种、型号、 扭矩
- 减速比或出力轴转速
- 工况及连接方式
- 数量 及安装的机械名称
- 入力 方式和入力 转速
- 马达 厂牌型 号或法兰 及马达轴 尺寸

- Series,model,torque
- Ratio, output shaft speed
- Working condition, connection mode
- Quantity, installation equipment name
- Input mode, input speed
- Motor brand, flange, output shaft size

重载型/Overloading type

WTN系列性能表/WTN series Performance data sheet

品名	WTN060		WTN085		WTN130		WTN200		WTN280	
搭载马达型号 Equipped motor type	42型步进马达 Stepper motor 50w~100w伺服电机 Servo motor				57型步进马达 Stepper motor 200W~400W伺服电机 Servo motor		86型步进马达 Stepper motor 750W伺服电机 Servo motor		110/130型步进电机 Stepper motor 1500w伺服电机 Servo motor	
支撑旋转平台轴承 Bearing type	交叉滚子轴承 Crossed roller bearing									
减速比 Ratio	5	10	5	10	10	18	10	18	10	18
转动惯量 Rotational inertia	3507×10^{-7}	3507×10^{-7}	12593×10^{-7}	12593×10^{-7}	81556×10^{-7}	81556×10^{-7}	361220×10^{-7}	361220×10^{-7}	146000×10^{-6}	
允许输出转矩 Allowable output torque	5.2N.m	4.6N.m	12N.m	10N.m	32N.m	20N.m	70N.m	70N.m	180N.m	
额定输出转速 Rated output speed	200r/min									
角度传动精度 Angle transmission precision	3arcmin									
反复定位精度 Reset positioning precision	±15arcsec									
齿隙 Backlash	无齿隙（可调节结构）No backlash(Adjustable structure)									
允许轴向负载 Allowable axial load	250N		500N		2000N		4000N		7000N	
允许惯性力矩 Allowable moment of inertia	5N.m		10N.m		50N.m		100N.m		200N.m	
旋转平台平行度 Parallelism of rotating platform	<0.015		<0.02				<0.04			
旋转平台同心度 Concentricity of rotating platform	<0.015									
噪音 Noise	65dB						67dB		71db	
防护等级 Protection level	IP40									
重量 Weight	0.6kg		1.2kg		2.8kg		9.6kg		18kg	

WTN060

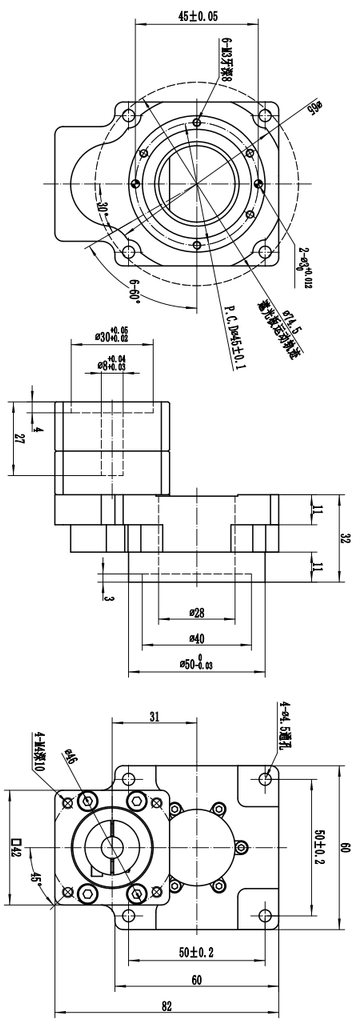

WTN085

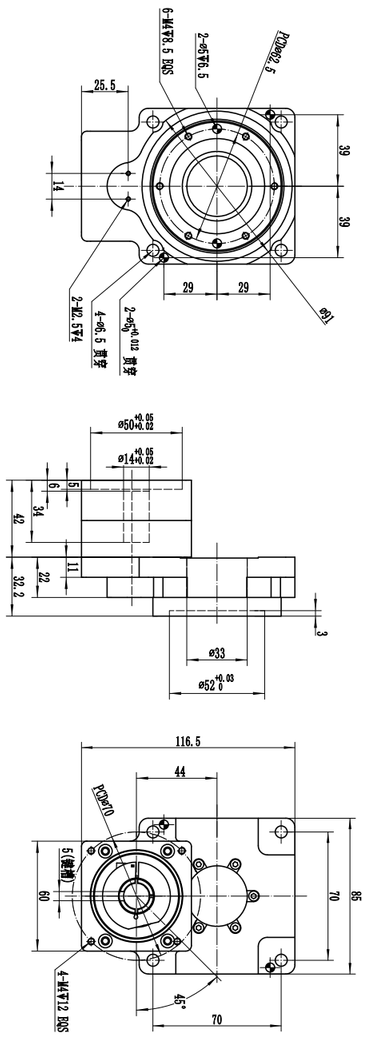

重载型/Overloading type

WTN系列性能表/WTN series Performance data sheet

WTN130

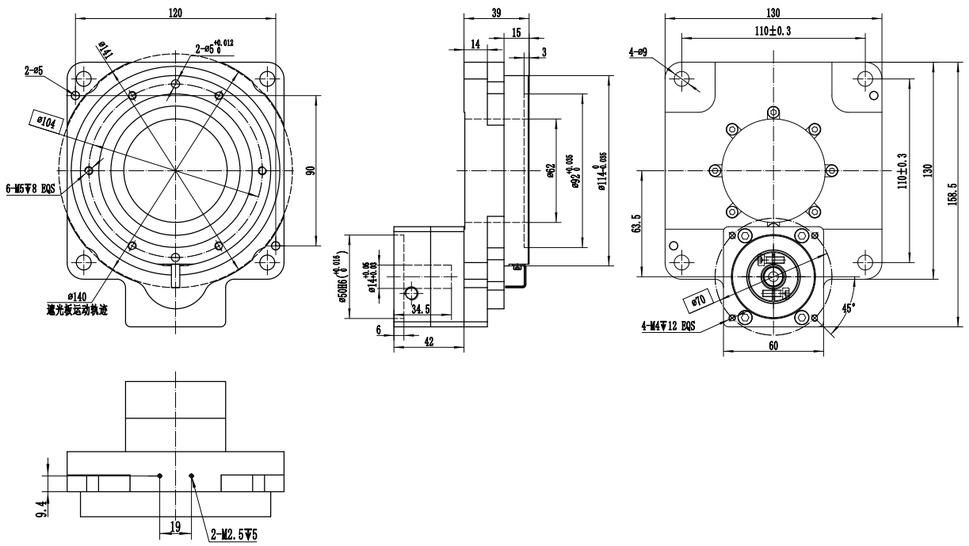

WTN200

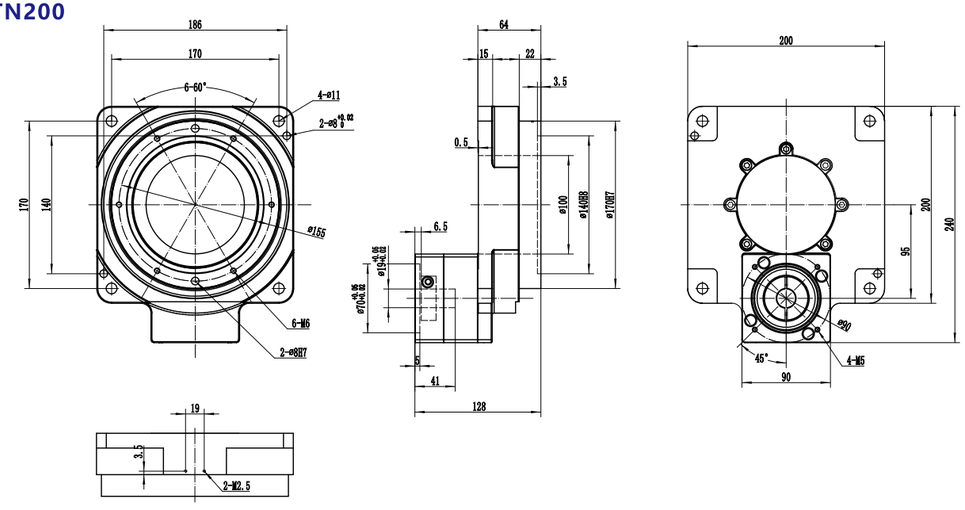

WTN280

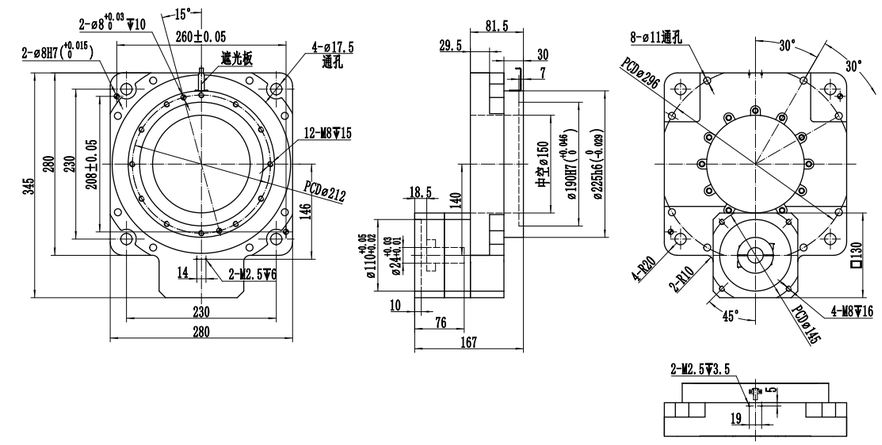

中空旋转式传动装置的特征/Features

一体入力轴/Integrated Input Shaft

一体式入力轴，高承载刚性，无打滑风险
Integrated input shaft, high bearing rigidity, no risk of slipping

大口径中空旋转平台可简洁地配线、配管
The large diameter hollow Rotary Actuator could simplify wiring and piping

大口径中空孔（贯穿）可用于布线复杂的配线与配管等场合，使装置设计更为简洁。
● 时输液管贯穿机构的装置

The large diameter hollow hole (through-hole) helps reduce the complexity of wiring and piping, thus simplifying equipment design.
•Filling equipment with piped-in liquid

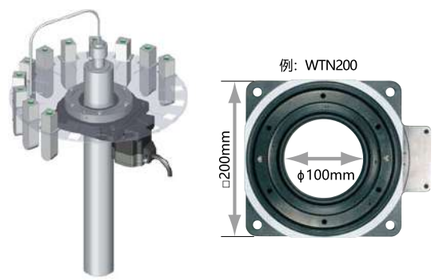

削减设计工时/Simplified Design

可直接将装置的工作台及机械手臂安装在旋转平台上。与使用皮带轮等机构零件时相比，可减少机构设计、零件调配、皮带状态调节等的工时与费用。
Tables and arms can be installed directly onto the output table. This saves the hassle and cost of designing an installation mechanism, arranging necessary mechanism parts, adjusting the belt tension, etc., when mechanical components such as a belt Motor + and pulley are used for installation.

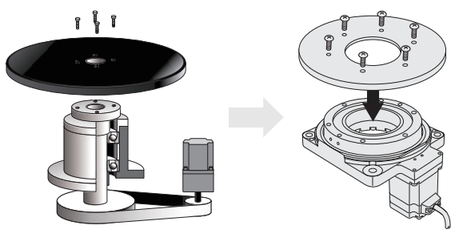

电动机+机构部件
（单独设计、采购）
Motor + Mechanical Components
(Designed seperately, Purchase)

DgⅡ系列
（一体化产品）
DG Ⅱ Series
(Integrated product)

大口径中空旋转平台/The large diameter hollow Rotary Actuator

型号 Model	安装尺寸 Frame Size(mm)	中空径 Hollow Diameter (mm)
WTN60	60	ϕ28
WTN85	85	ϕ33
WTN130	130	ϕ62
WTN200	200	ϕ100
WTN280	280	ϕ150

标准型的构造 /Standard Structure

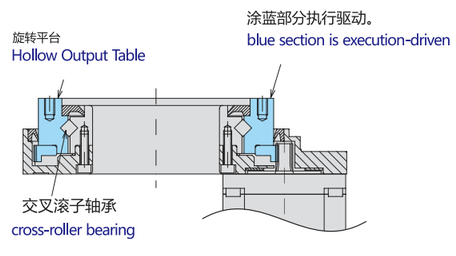

高负载•高刚性/High Load and High Rigidity

重载型的旋转平台的轴承采用交叉滚子轴承，实现了高负载、高刚性。
• 最大容许轴向负载　4000N
• 最大容许惯性力矩　100N·m

The heavy load rotary actuator uses a cross-roller bearing which allows for both high load and high rigidity.
Maximum Permissible Axial Load 4000 N
Maximum Permissible Inertia Moment 100 N·m

[运行示例]
品 名：WTN200010
Example Operation
Actuators Name：WTN200010

搬 运 质 量　91kg(工作物6个+工作台)
：工作物10kg/个×6个
：工作台31kg(直径500mm、厚20mm、铁制)
伸出的距离：160mm
安 装 方 向：水平

Load : 91 kg (load 6pcs + working table)
Load 10 kg/piece × 6 pieces
Table 31 kg
(Diameter 500 mm (19.7 in.), thickness 20 mm (0.79 in.), iron)

Overhang Distance : 160 mm (6.3 in.)
Installation Direction : Horizontal

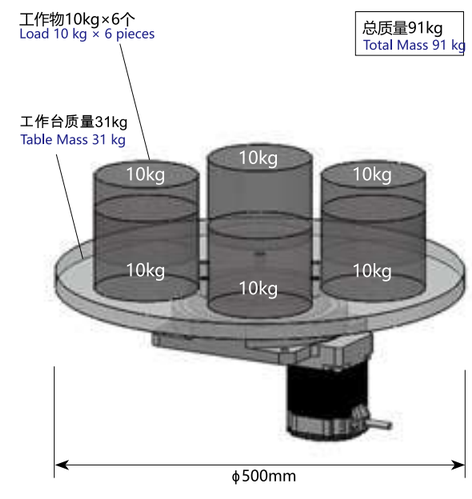

•高负载
High Load

总质量91kg的轴向负载为893N。
（10kg×6个+31kg）×gm/s²≒893N
DG200R的容许轴向负载为4000N，在容许值内。

The axial load for a total mass of 91 kg is 893 N.
The permissible axial load of the WTN200 is 4000 N, so this is within the permissible value.

可高负载驱动/High Load Driving

•高刚性
距工作台中央部160mm的位置有10kg的工作物时，惯性力矩为15.7N·m。10kg×gm/s2×0.16m≒15.7N·m

WTN200的容许惯性力矩为100N·m，在容许值内。

•High Rigidity
When a working load of 10kg is placed at a distance of 160 mm (6.3 in.) from the center of the table, the Inertia Moment is 10kg×gm/s2×0.16m≒15.7N·m

The permissible moment of the WTN200 is 100 N·m, within the permissible value.

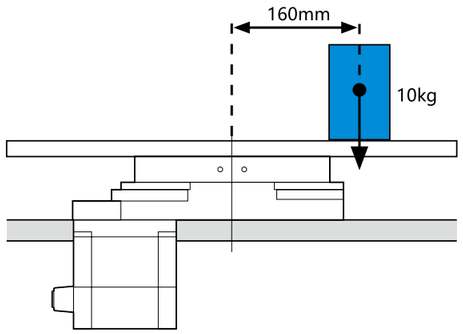

高刚性旋转式传动装置
将高负载加载到非工作台中央部的位置时能够顺畅驱动
A high-rigidity rotary actuator allows a large load that is far away from the table center to be driven

无齿隙的高精度定位/High Positioning Accuracy with Non-Backlash

● 无齿隙
● 重复定位精度　±15arcsec（±0.004°）
请注意 精度是在一定负载、一定温度（常温）下的数值。

● Non-Backlash
● Repeated positioning Accuracy ±15 arc seconds (±0.004°)

Note
The repetitive positioning accuracy is measured at a constant temperature (normal temperature) under a constant load.

用途范例/Applications

利用中空孔的用途
Applications that require hollow shaft

- 输液管贯穿机构的装置
  Filling equipment with piped-in liquid

- 光学用途 Optical Application

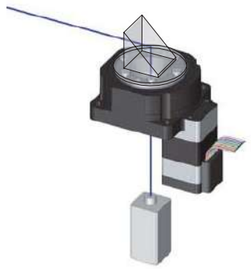

需要高刚性的用途
Applications that Require High Rigidity

- 施加惯性力矩负荷的用途(倒挂安装)
  Applications in which a Moment Load is Applied (Ceiling installation)

需要高性能电动机的用途 Applications that Require High Performance Motors

- 高精度定位用途(图像检查装置)
  High Positioning Accuracy (Image inspection equipment)

- 负载惯性发生变化的用途(磁盘制造装置)
  Applications with Load Fluctuations (Disc manufacturing equipment)

安装方向自由 Install in Any Direction

DGⅡ系列除水平安装外，还可垂直安装或倒挂安装，装置设计的范围较广。

The DG Series can not only be installed horizontally, but can also be ceiling mounted or wall mounted. More options for equipment design.

请注意

中空旋转式传动装置偶尔会有少量润滑油渗出。如果润滑油渗出导致周围环境污染，请在定期检查时进行确认或安装接油盘等装置。

Note
A small amount of grease will occasionally seep out of the hollow rotary actuator. If a grease leak would cause a contamination issue near the machine, either perform routine inspections, or install protective equipment such as an oil sump.

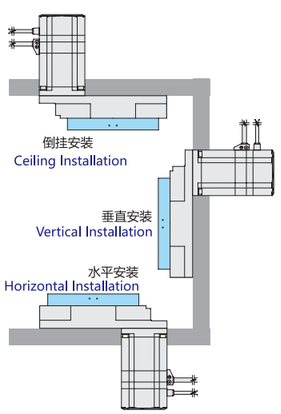

INSTALLATION OF
PLANETARY REDUCERS
减速机安装方法

减速机如由贵司安装，请遵守以下要求。

行星减速机马达安装法兰部的尺寸因伺服马达而异，有可能无法安装指定的伺服马达。（请务必安装订购时所指定的伺服马达。）
伺服马达的输出轴可能涂有防锈剂等。

If your company install the planetary reducers by yourself, please comply with the following requirements:
The size of the motor mounting flange of the planetary reducer differs according to the servo motor, the designated servo motor maybe not able to be installed. (Please be sure to install the designated servo motor when purchased)
There may be rust inhibitor on the output shaft of the servo motor.

1 将马达轴安装面的防锈剂、油等擦拭干净。
Clean up the rust inhibitor and grease on the installing side of the motor shaft

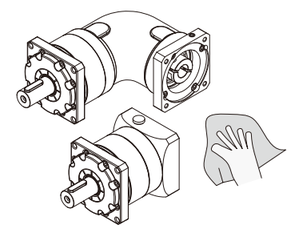

2 取下塞子。
Take off the plug

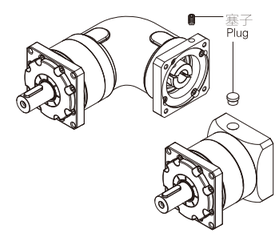

3 转动输入轴，使加紧螺栓等头部对准塞孔。此时请确认加紧螺栓处于松弛状态。将减速机垂直放置在平整场所，使减速机的马达安装面朝上。（如有轴套，请按图示进行安装。）

Rotate the input shaft, and align the top of the fastening bolt at the plug hole. Make sure that the fastening bolt is loose at the time. Lay the reducer vertically on he flat place, and face up the installing side of the motor.(If there is a shaft sleeve, please install it as the picture shows below)

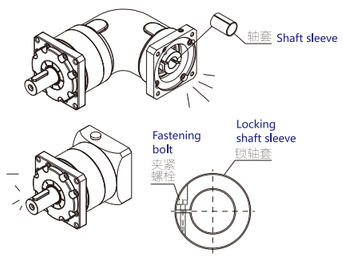

4 请将马达轴缓缓地插入输入轴中以免造成撞击，确认马达法兰面与减速机法兰面紧贴。按规定的紧固扭矩紧固马达安装螺栓。（参见表3）

Please insert the motor shaft into the input shaft slowly to avoid impact, and make sure the surfaces of the motor flange and the reducer flange are stick together. Fasten the motor mounting bolt according to the specified fastening torque. (Refer to the Table 3)

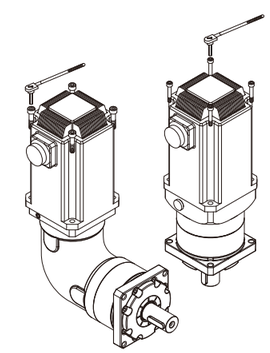

表3 螺栓紧固扭矩 Diagram 3 Bolt fastening torque

螺栓大小 Bolt size		M3	M4	M5	M6	M8	M10	M12	M16
马达安装螺栓 Motor mounting bolt	N・m	1.0	2.5	5.1	8.7	21	42	72	134
	kgf・m	0.11	0.26	0.52	0.89	2.1	4.3	7.3	14
夹紧螺栓 Fastening bolt	N・m	1.9	4.3	8.7	15	36	71	125	–
	kgf・m	0.18	0.44	0.89	1.5	3.7	7.2	13	–

5 使用扭矩扳手等工具，按规定的紧固扭矩紧固输入轴的夹紧螺栓。（参见表3）

Follow the specified fastening torque, and fasten the fastening bolt of the input shaft with the tools such as torque spanner.(Refer to the table 3)

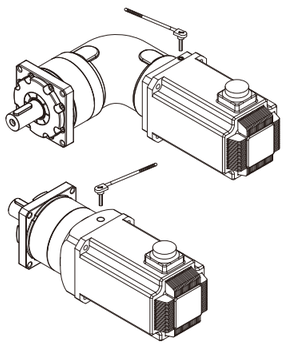

6 安装塞子，至此作业完成。

Install the plug,and the installinn complete.

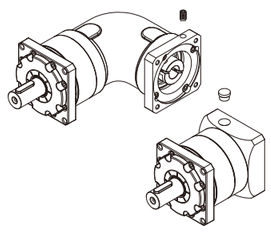

安装与设置

Installation and setting up

- 避免在直接接触雨水的场所使用。（如需在户外或接触粉尘、水滴的场所使用，请事先向我公司咨询。）
- 请设置在0～40℃的环境中。
- 请安装在牢固无振动的台面，用螺栓等切实固定。安装时，应保证便于保养和检查。

- Please avoid using in places that are exposed to rain directly. (Please consult to WANSHSIN or our distributors first when using it outside or in places exposed to dust and water.)
- Please fit it in the temperature under 0-40℃.
- Please install it on the stable and firm surface, and fasten it tightly with bolt.
  During installation, it is necessary to ensure easy maintenance and inspection.

输出轴侧连接

Output shaft connecting

- 在输出法兰型上安装齿轮、皮带轮、链轮等时，请采用带凸缘的安装设计，嵌入输出法兰凸缘部。安装时请注意避免施加过大推力载荷。
- 在输出轴型上安装联轴器、链轮等时，请注意避免向输出轴施加过大推力载荷。嵌入时不得大力敲击输出轴，否则会导致轴承与减速机内部受损。
- 联轴器等部位的轴与键间隙过大会导致烧结，因此安装时请注意。
- 连接时请准确定心。

- When installing gear wheels, belt pulley and chain wheels n the output flange model, please use the installing design with bulged edges, and implant them into it. Avoid applying too much strength when installing.
- When installing coupling, chain wheels on the output shaft, please do not apply too much strength onto it. Do not knock too hard on the output shaft when implanting, or it may cause damages to the axletree and the interior part of the reducer.
- Too much gap between shaft and key in the coupling may cause firing so please be careful when installing.
- Please accurate centering when connect.

安装到输出法兰部（限法兰型）

Install it to the output flange(limited to the flange model)

- 将装置部件等安装到输出法兰部时，请使用扭矩扳手等工具按规定的紧固扭矩进行紧固。
  When installing the device component to the output flange, please follow the specified fastening torque and use the tools such as torque wrench.

螺栓大小 Bolt size		M3	M4	M5	M6	M8	M10	M12	M16	M20
夹紧螺栓 Fastening bolt	N・m	1.9	4.3	8.7	15	36	71	125	310	603
	kgf・m	0.18	0.44	0.89	1.5	3.7	7.2	13	32	62

※ 推荐螺栓强度分类12.9级以上

Recommended strength level of the bolt is above 12.9

开机前的注意事项

Notes before starting

- 出厂时已按规定量加入润滑油，因此到货后可直接使用。
- 首次运转时，请先确认输出轴的转向，然后逐渐增加负荷。

- The specified amount of lubricant has been added before delivery, so the reducers can be used directly when arrived.
- Please confirm the rolling direction of the output shaft and increase the load gradually at the first time operating.

运转中的注意事项

Notes need attention during operating

- 请注意不得过载。
- 输出轴的转速不得大于规定转速。
- 出现以下情况时，请停机检查。
  1、温度突然开始升高。
  2、突然发出很大异响。
  3、转速突然开始不稳定。
- 可能的原因如下，请及时处理。
  1、是否处于过载状态?
  2、轴承、齿轮、传动面有无损伤?
  3、机器连接条件有无异常?

- Do not overloaded.
- The rolling speed of the output shaft should not be faster than the specified one.
- Please shut the machine down when following situation shows.
  1.The temperature rise suddenly.
  2.Strange noise are emerged.
  3.The rolling speed becomes unstable.
- The possible reasons are as follows, please make sure to deal with it in time.
  1.Whether it is overloaded or not?
  2.Are the axletrees, gear wheels and the rolling side damaged?
  3.Is the connecting condition abnormal?

润滑油管理

The lubricant managing

- 油脂不能更换。
- The grease can not be replace.

每日检查

Daily check

- 运转中减速机外壳温度有无异常上升？（最高不大于90℃）
- 轴承、齿轮等部位有无异响?
- 减速机有无异常振动？（出现此类异常时，请立即停机并联系我公司。）
- 有无润滑油漏油？（出现油脂泄漏时，请联系我公司。）

- Whether the temperature of the reducer shell rise abnormally?(Maximum 90 ℃)
- Are there any abnormal noise on axletrees or chain wheels.
- Is the reducer vibrating abnormally?(If it happens, please shut down the machine and contact WANSHSIN or our distributors)
- Is the lubricant leaking?(If it happens, please contact WANSHSIN or our distributors.)

定期检查

Regular check

- 有无过载状态，有无异常旋转?
- 皮带轮、链轮、减速机安装螺栓等有无松动?
- 主要部件的检查与维护。（出现异常现象时，请立即停机并联系我公司。）

- Whether it is overloaded or rolling abnormally?
- Is the belt pulley, chain wheel, the installation bolt of the reducer loose?
- The check and maintenance of main components. (When there is an abnormal phenomenon, please shut down the machine and contact WANSHSIN or our distributors.

Committed To Building A World-class Transmission Brand WANSHSIN®